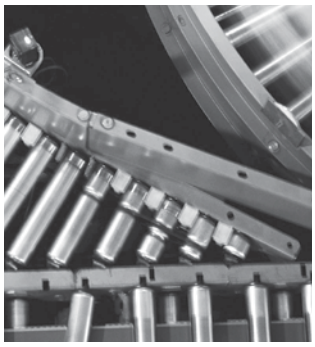

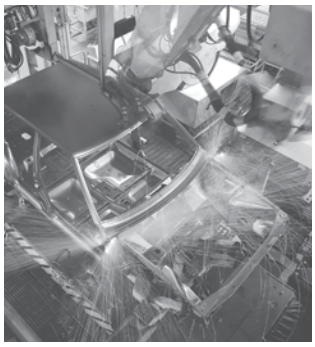

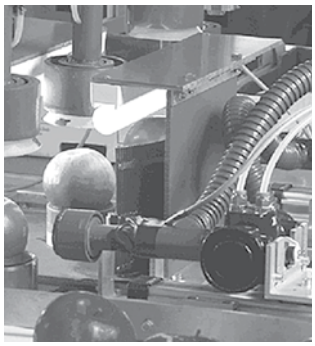

Air Preparation Products

Parker Hannifin Corporation
Pneumatic Division
Richland, Michigan
www.parker.com/pneumatics

Air Preparation Products

Global FRL's

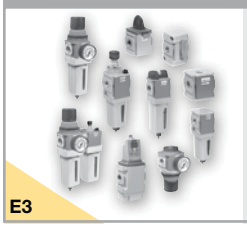

- Port size: 1/4 through 3/4 inch
- Maximum supply pressure: 300 PSIG
- Operating temperature: -13°F through 150°F
- Filters, regulators, filter / regulators, lubricators and accessories

E3

General Industrial FRL's

- Port size: 1/8 through 3 inch
- Maximum supply pressure: 250 PSIG
- Operating temperature: 32°F through 150°F
- Filters, regulators, filter / regulators, lubricators and accessories

E79

Prep-Air II FRL's

- Compact & standard
- Port size: 1/4 through 3/4 inch
- Filters, regulators, filter / regulators, lubricators and accessories
- Operating temperature: 32°F through 175°F
- Point of use applications
- Modular construction

E40

Stainless Steel FRL's

- Port sizes: 1/4 and 1/2 inch
- Stainless steel construction handles most corrosive environments
- Operating temperature -40°F through 180°F
- Meets NACE specifications MR-01-75/ISO 15156
- Filters, regulators, filter / regulators, and lubricators

E100

Miniature FRL's

- Port size: 1/8 through 3/8 inch
- Filters, regulators, filter / regulators, lubricators and accessories
- Operating temperature: -4°F through 125°F
- Non-modular construction
- Ideal for point of use applications

E59

Precision / Proportional Regulators

- Port sizes: 1/4 through 2 inch
- Maximum supply pressure: 300 PSIG
- Operating temperature: -40°F through 200°F
- High precision
- Electronic proportional

E107

P3N FRL's

- Port size: 3/4 through 1-1/2 inch
- Filters, regulators, filter / regulators, lubricators and accessories
- Operating temperature: 32°F through 175°F
- High flow

E70

Bulk Liquid Separators

- Port sizes 1/4 through 6 inch flange
- High liquid removal efficiencies at all flow conditions
- Low maintenance
- Suitable for variable flow compressors

E118

Parker Hannifin Corporation
Pneumatic Division
Richland, Michigan
www.parker.com/pneumatics

Global Modular Particulate Filters

- Integral 1/4", 3/8", 1/2", or 3/4" ports (NPT, BSPP & BSPT)
- High efficiency 5 micron element as standard
- Excellent water removal efficiency
- Robust but lightweight aluminum construction
- Positive bayonet latch to ensure correct & safe fitting

P31 P32 P33

Operating information

		P31 (Mini)	P32 (Compact)	P33 (Standard)
Supply pressure (max):				
Plastic Bowl		10 bar (150 PSIG)	10 bar (150 PSIG)	10 bar (150 PSIG)
Metal Bowl		17 bar (250 PSIG)	17 bar (250 PSIG)	17 bar (250 PSIG)
Operating temperature:				
Plastic Bowl		-10°C to 52°C (14°F to 25°F)	-25°C to 52°C (-13°F to 25°F)	-25°C to 52°C (-13°F to 25°F)
Metal Bowl		-10°C to 65.5°C (14°F to 150°F)	-25°C to 65.5°C (-13°F to 150°F)	-25°C to 65.5°C (-13°F to 150°F)
Standard filtration:		5 micron	5 micron	5 micron
Flow Capacity*:	1/4	12 dm^3/s (25 SCFM)*	18 dm^3/s (38 SCFM)*	—
	3/8	—	30 dm^3/s (64 SCFM)*	—
	1/2	—	38 dm^3/s (80 SCFM)*	40 dm^3/s (85 SCFM)*
	3/4	—	—	48 dm^3/s (102 SCFM)*

*Inlet pressure 6.3 bar (91.3 PSIG), pressure 0.34 bar (4.9 PSIG).

For Flow Curve Charts please see page E34.

Ordering information

P31F A 9 2 E G M N

Basic series	
Global modular mini particulate filter	P31F
Global modular compact particulate filter	P32F
Global modular standard particulate filter	P33F

Engr level	
Current	A

Thread type	
BSPP	1
BSPT	2
NPT	9

Port size	
1/4 (P31, P32)	2
3/8 (P32)	3
1/2 (P32, P33)	4
3/4 (P33)	6

Element	
5µ Element	E

Bowl type	
G	Poly bowl with bowl guard
M	Metal bowl without sight gauge
S*	Metal bowl with sight gauge

* Not available with P31 Series.

Drain type	
M	Manual drain
A	Auto drain (P32, P33)
B	Pulse drain (P31)

Mounting	
N	No bracket

Bold items are most common.

Parker Hannifin Corporation
Pneumatic Division
Richland, Michigan
www.parker.com/pneumatics

Particulate Filters

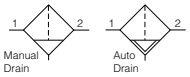

Port size	Bowl type	Drain type	Element type	Part number P31	P32	P33
1/4"	Poly	Manual	5 micron	**P31FA92EGMN**	**P32FA92EGMN**	
1/4"	Poly	Pulse	5 micron	**P31FA92EGBN**		
1/4"	Poly	Auto	5 micron		**P32FA92EGAN**	
1/4"	Metal	Manual	5 micron	**P31FA92EMMN**	**P32FA92ESMN**	
1/4"	Metal	Pulse	5 micron	**P31FA92EMBN**		
1/4"	Metal	Auto	5 micron		**P32FA92ESAN**	
3/8"	Poly	Manual	5 micron		**P32FA93EGMN**	
3/8"	Poly	Auto	5 micron		**P32FA93EGAN**	
3/8"	Metal	Manual	5 micron		**P32FA93ESMN**	
3/8"	Metal	Auto	5 micron		**P32FA93ESAN**	
1/2"	Poly	Manual	5 micron		**P32FA94EGMN**	**P33FA94EGMN**
1/2"	Poly	Auto	5 micron		**P32FA94EGAN**	**P33FA94EGAN**
1/2"	Metal	Manual	5 micron		**P32FA94ESMN**	**P33FA94ESMN**
1/2"	Metal	Auto	5 micron		**P32FA94ESAN**	**P33FA94ESAN**
3/4"	Poly	Manual	5 micron			**P33FA96EGMN**
3/4"	Poly	Auto	5 micron			**P33FA96EGAN**
3/4"	Metal	Manual	5 micron			**P33FA96ESMN**
3/4"	Metal	Auto	5 micron			**P33FA96ESAN**

Service kits

Description		P31	P32	P33
Plastic bowl / bowl guard	Manual drain	**P31KA00BGM**	**P32KA00BGM**	**P33KA00BGM**
	Pulse drain	**P31KA00BGB**		
	Auto drain		**P32KA00DA**	**P32KA00DA**
Metal bowl w/o sight gauge	Manual drain	**P31KA00BMM**		
	Pulse drain	**P31KA00BMB**		
	Auto drain		**P32KA00DA**	**P32KA00DA**
Metal bowl / sight gauge	Manual drain		**P32KA00BSM**	**P33KA00BSM**
	Auto drain		**P32KA00DA**	**P32KA00DA**
Filter element	5µ particulate	**P31KA00ESE**	**P32KA00ESE**	**P33KA00ESE**
C-bracket	Fits to body	**P31KA00MW**		
L-bracket	Fits to body		**P32KA00ML**	**P33KA00ML**
T-bracket	Fits to body connector		**P32KA00MB**	**P32KA00MB**
	With body connector	**P31KA00MT**	**P32KA00MT**	**P33KA00MT**
Body connector		**P31KA00CB**	**P32KA00CB**	**P32KA00CB**
Differential pressure indicator (replacement)		**P31KA00RQ**	**P32KA00RQ**	**P32KA00RQ**

☐ Most popular.

Parker Hannifin Corporation
Pneumatic Division
Richland, Michigan
www.parker.com/pneumatics

P31

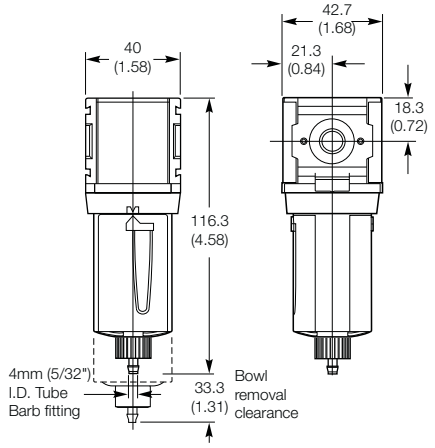

P32

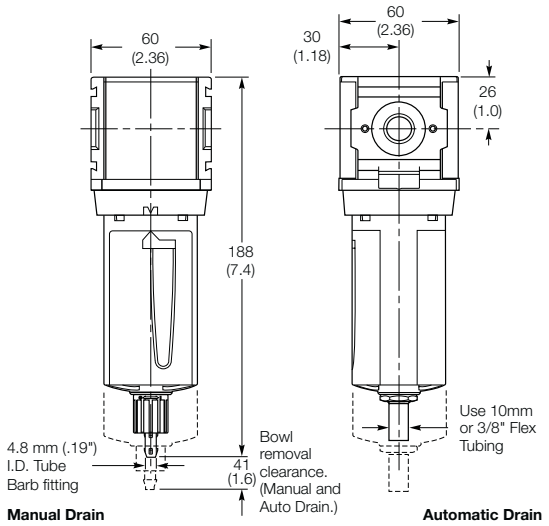

P33

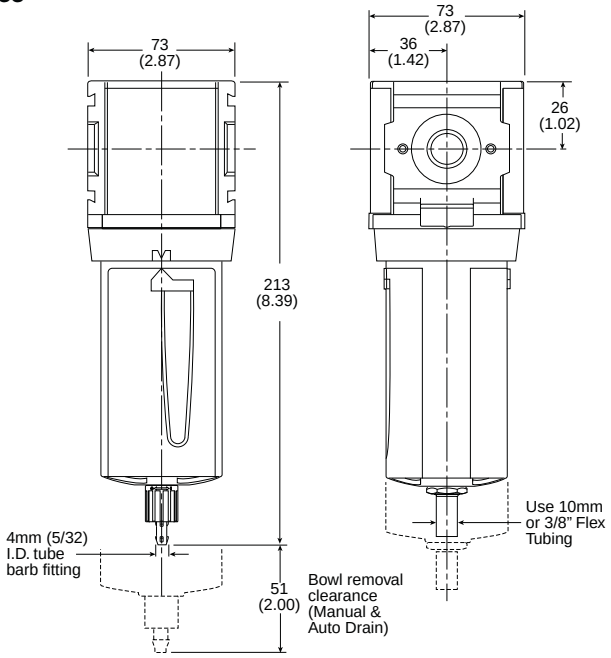

Material specifications

Description		P31	P32	P33
Body		Aluminum	Aluminum	Aluminum
Body cap		N/A	N/A	ABS
Bowl	Plastic bowl	Polycarbonate	Polycarbonate	Polycarbonate
	Metal bowl	Aluminum	Aluminum	Aluminum
Bowl guard		Nylon	Nylon	Nylon
Deflector		N/A	Polypropylene	Polypropylene
Element retainer / baffle		Acetal	Acetal	Acetal
Filter element		Sintered Polyethylene	Sintered Polyethylene	Sintered Polyethylene
Seals		Nitrile	Nitrile	Nitrile
Sight gauge	Metal bowl	N/A	Polycarbonate	Polycarbonate

Parker Hannifin Corporation
Pneumatic Division
Richland, Michigan
www.parker.com/pneumatics

Global Modular Coalescing & Adsorber Filters

- Integral 1/4", 3/8", 1/2", 3/4" ports (NPT, BSPP & BSPT)
- Removes liquid aerosols and sub micron particles
- Oil free air for critical applications, such as air gauging, pneumatic instrumentation and control
- Positive bayonet latch to ensure correct & safe fitting
- Adsorbing activated carbon element removes oil vapors and most hydrocarbons

Note: To optimize the life of coalescing element, it is advisable to install a pre-filter with a 5 micron element upstream of the coalescing filter. To optimize the life of an Adsorber it is advisable to install a Coalescing Filter upstream of the Adsorber. Adsorber element should be replaced approximately every 1000 hours of service.

P31

P32

P33

Operating information

	P31 (Mini)	P32 (Compact)	P33 (Standard)
Supply pressure (max):			
Plastic Bowl	10 bar (150 PSIG)	10 bar (150 PSIG)§	10 bar (150 PSIG)§
Metal Bowl	17 bar (250 PSIG)	10 bar (150 PSIG)§	10 bar (150 PSIG)§
Operating temperature:			
Plastic Bowl	-10°C to 52°C (14°F to 125°F)	-25°C to 52°C (-13°F to 125°F)	-25°C to 52°C (-13°F to 125°F)
Metal Bowl	-10°C to 65.5°C (14°F to 150°F)	-25°C to 65.5°C (-13°F to 150°F)	-25°C to 65.5°C (-13°F to 150°F)
Standard filtration:	1.0 and 0.01 micron	1.0 and 0.01 micron	1.0 and 0.01 micron
Flow Capacity:			
1.0 Micron Coalescing –			
Energy Efficient Flow*	3.8 dm^3/s (8 SCFM)	17 dm^3/s (36 SCFM)	32 dm^3/s (68 SCFM)
Maximum Flow**	6 dm^3/s (13 SCFM)	27 dm^3/s (57 SCFM)	44 dm^3/s (93 SCFM)
0.01 Micron Coalescing –			
Energy Efficient Flow*	2 dm^3/s (4.2 SCFM)	11 dm^3/s (23 SCFM)	20 dm^3/s (42 SCFM)
Maximum Flow**	3.8 dm^3/s (8 SCFM)	28 dm^3/s (38 SCFM)	34 dm^3/s (72 SCFM)
Activated Carbon Adsorber			
Rated Flow*:	6 dm^3/s (13 SCFM)	27 dm^3/s (57 SCFM)	44 dm^3/s (93 SCFM)

* Inlet pressure 6.3 bar (91.3 PSIG), pressure drop 0.2 bar (3 PSIG) saturated element.
** Inlet pressure 6.3 bar (91.3 PSIG), pressure drop 0.4 bar (6 PSIG) saturated element.
§ Without pressure indicator (DPI) – max. supply pressure for metal bowl version is 17 bar (250 psig).

For Flow Curve Charts please see page E35.

Ordering information

P31F A 9 2 C G M N

Basic series	
Global modular mini coalescing filter	P31
Global modular compact coalescing filter	P32
Global modular standard coalescing filter	P33

Engr level	
Current	A

Thread type	
BSPP	**1**
BSPT	2
NPT	**9**

Port size	
1/4 (P31, P32)	**2**
3/8 (P32)	**3**
1/2 (P32, P33)	**4**
3/4 (P33)	**6**

Element	
C	**0.01µ Element**
D	**0.01µ Element with DPI**
9	**1µ Element**
Q	**1µ Element with DPI**
A	**Adsorber**

Bowl type	
G	**Poly bowl with bowl guard**
M	**Metal bowl without sight gauge**
S*	**Metal bowl with sight gauge**

* Not available with P31 Series.

Drain type	
M	**Manual drain**
A	**Auto drain (P32, P33)**
B	**Pulse drain (P31)**

Mounting	
N	**No bracket**

Bold items are most common.

Parker Hannifin Corporation
Pneumatic Division
Richland, Michigan
www.parker.com/pneumatics

Coalescing and Adsorber Filters, (1 micron and absorber elements available)

Port size	Bowl type	Drain type	Element type	Part number P31	P32	P33
1/4"	Poly	Manual	0.01 micron	**P31FA92CGMN**	**P32FA92DGMN**	
1/4"	Poly	Pulse	0.01 micron	**P31FA92CGBN**		
1/4"	Poly	Auto	0.01 micron		**P32FA92DGAN**	
1/4"	Metal	Manual	0.01 micron	**P31FA92CMMN**	**P32FA92DSMN**	
1/4"	Metal	Pulse	0.01 micron	**P31FA92CMBN**		
1/4"	Metal	Auto	0.01 micron		**P32FA92DSAN**	
3/8"	Poly	Manual	0.01 micron		**P32FA93DGMN**	
3/8"	Poly	Auto	0.01 micron		**P32FA93DGAN**	
3/8"	Metal	Manual	0.01 micron		**P32FA93DSMN**	
3/8"	Metal	Auto	0.01 micron		**P32FA93DSAN**	
1/2"	Poly	Manual	0.01 micron		**P32FA94DGMN**	**P33FA94DGMN**
1/2"	Poly	Auto	0.01 micron		**P32FA94DGAN**	**P33FA94DGAN**
1/2"	Metal	Manual	0.01 micron		**P32FA94DSMN**	**P33FA94DSMN**
1/2"	Metal	Auto	0.01 micron		**P32FA94DSAN**	**P33FA94DSAN**
3/4"	Poly	Manual	0.01 micron			**P33FA96DGMN**
3/4"	Poly	Auto	0.01 micron			**P33FA96DGAN**
3/4"	Metal	Manual	0.01 micron			**P33FA96DSMN**
3/4"	Metal	Auto	0.01 micron			**P33FA96DSAN**

Service kits

Description		P31	P32	P33
Plastic bowl / bowl guard	Manual drain	**P31KA00BGM**	**P32KA00BGM**	**P33KA00BGM**
	Pulse drain	**P31KA00BGB**		
	Auto drain		**P32KA00DA**	**P32KA00DA**
Metal bowl w/o sight gauge	Manual drain	**P31KA00BMM**		
	Pulse drain	**P31KA00BMB**		
	Auto drain		**P32KA00DA**	**P32KA00DA**
Metal bowl / sight gauge	Manual drain		**P32KA00BSM**	**P33KA00BSM**
	Auto drain		**P32KA00DA**	**P32KA00DA**
Filter element	1µ coalescing	**P31KA00ES9**	**P32KA00ES9**	**P33KA00ES9**
	0.01µ coalescing	**P31KA00ESC**	**P32KA00ESC**	**P33KA00ESC**
	Activated carbon adsorber	**P31KA00ESA**	**P32KA00ESA**	**P33KA00ESA**
C-bracket	Fits to body	**P31KA00MW**		
L-bracket	Fits to body		**P32KA00ML**	**P33KA00ML**
T-bracket	Fits to body connector		**P32KA00MB**	**P32KA00MB**
	With body connector	**P31KA00MT**	**P32KA00MT**	**P32KA00MT**
Body connector		**P31KA00CB**	**P32KA00CB**	**P32KA00CB**
Differential pressure indicator (replacement)		**P31KA00RQ**	**P32KA00RQ**	**P32KA00RQ**

Most popular.

Parker Hannifin Corporation
Pneumatic Division
Richland, Michigan
www.parker.com/pneumatics

P31

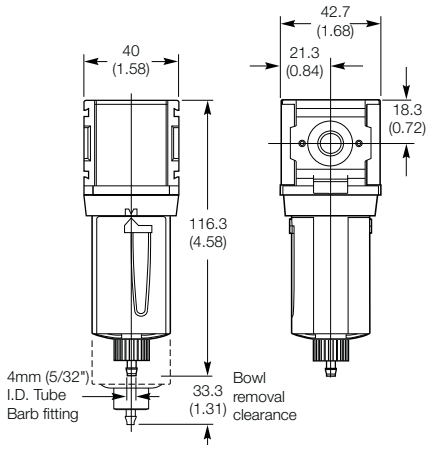

P33

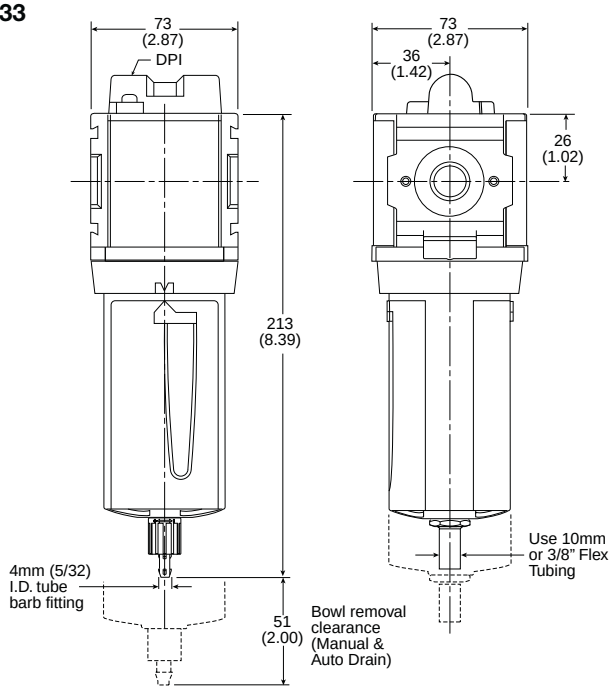

P32

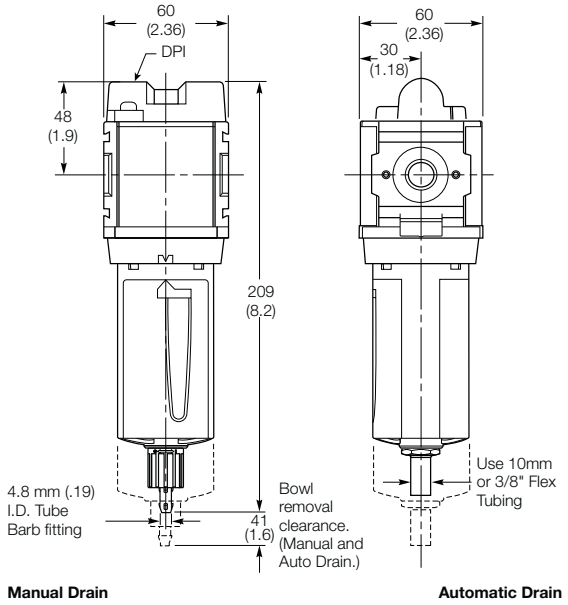

Material specifications

Description		P31	P32	P33
Body		Aluminum	Aluminum	Aluminum
Body cap		N/A	N/A	ABS
Bowl	Plastic bowl	Polycarbonate	Polycarbonate	Polycarbonate
	Metal bowl	Aluminum	Aluminum	Aluminum
Bowl guard		Nylon	Nylon	Nylon
Filter element		Borosilicate cloth, 1.0 and .01 micron	Borosilicate cloth, 1.0 and .01 micron	Borosilicate cloth, 1.0 and .01 micron
Adsorber		Activated corbon	Activated corbon	Activated corbon
Seals		Nitrile	Nitrile	Nitrile
Sight gauge	Metal bowl	N/A	Polycarbonate	Polycarbonate

Parker Hannifin Corporation
Pneumatic Division
Richland, Michigan
www.parker.com/pneumatics

Global Modular Regulators

- Integral 1/4", 3/8", 1/2", 3/4" ports (NPT, BSPP & BSPT)
- Robust but lightweight aluminum construction
- Secondary pressure ranges 0-2 bar (0-30 PSIG), 0-4 bar, (0-60 PSIG), 0-8 bar (0-125 PSIG)
- Secondary aspiration plus balanced poppet provides quick response and accurate pressure regulation.
- Relieving & Non-relieving types
- Non-rising knob

P31

P32

P33

⚠ WARNING

Product rupture can cause serious injury.
Do not connect regulator to bottled gas.
Do not exceed maximum primary pressure rating.

CAUTION:

REGULATOR PRESSURE ADJUSTMENT –
The working range of knob adjustment is designed to permit outlet pressures within their full range. Pressure adjustment beyond this range is also possible because the knob is not a limiting device. This is a common characteristic of most industrial regulators, and limiting devices may be obtained only by special design.
For best performance, regulated pressure should always be set by increasing the pressure up to the desired setting.

Operating information

		P31 (Mini)	P32 (Compact)	P33 (Standard)
Supply pressure (max):		20 bar (300 PSIG)	20 bar (300 PSIG)	20 bar (300 PSIG)
Operating temperature:		-20°C to 65.5°C (-4°F to 150°F)	-25°C to 65.5°C (-13°F to 150°F)	-25°C to 65.5°C (-13°F to 150°F)
Units with square gauges:		-15°C to 65.5°C (5°F to 150°F)		
Flow Capacity*:	1/4	30 dm^3/s (64 SCFM)	41 dm^3/s* (81 SCFM)*	—
	3/8	—	65 dm^3/s* (138 SCFM)*	—
	1/2	—	67 dm^3/s* (142 SCFM)*	100 dm^3/s* (212 SCFM)*
	3/4	—	—	100 dm^3/s* (212 SCFM)*

* Inlet pressure 10 bar (145 PSIG). Secondary pressure 6.3 bar (91.3 PSIG), pressure drop 1 bar (14.7 PSIG)

For Flow Curve Charts please see page E36.

Ordering information

P31R A 9 2 B N N P

Basic series	
Global modular mini regulator	P31R
Global modular compact regulator	P32R
Global modular standard regulator	P33R

Engr level	
Current	A

Thread type	
BSPP	1
BSPT	2
NPT	9

Port size	
1/4 (P31, P32)	2
3/8 (P32)	3
1/2 (P32, P33)	4
3/4 (P33)	6

Relief	
Relieving	B
Non-relieving	N
Reverse flow-relieving	R

Mounting	
P	Plastic panel mount nut

Adjustment range			
P31 & P32 with square gauge			With round gauge
psig	bar	Z	2 bar; 30 psig; 0.2 MPa
1 = 30*	V = 2*	M	4 bar; 60 psig; 0.4 MPa
3 = 60	S = 4	G	8 bar; 125 psig; 0.8 MPa
5 = 125	T = 8	J§‡	17 bar; 250 psig; 1.7 MPa
			Without gauge
		Y	2 bar; 30 psig; 0.2 MPa
		L	4 bar; 60 psig; 0.4 MPa
		N	8 bar; 125 psig; 0.8 MPa
		H§‡	17 bar; 250 psig; 1.7 MPa

* Unit comes with 0-4 bar or 0-60 psig gauge respectively.
§ Not available with poly bowl with bowl guard.
‡ Not available with P31 Series.

Bold items are most common.

Parker Hannifin Corporation
Pneumatic Division
Richland, Michigan
www.parker.com/pneumatics

Regulators

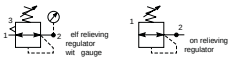

Port size	Pressure (relieving)	Gauge	Part number P31	P32	P33
1/4"	8 bar (125 PSIG)	—	**P31RA92BNNP**	**P32RA92BNNP**	
1/4"	8 bar (125 PSIG)	Round	**P31RA92BN5P**	**P32RA92BNGP**	
3/8"	8 bar (125 PSIG)	—		**P32RA93BNNP**	
3/8"	8 bar (125 PSIG)	Round		**P32RA93BNGP**	
1/2"	8 bar (125 PSIG)	—		**P32RA94BNNP**	**P33RA94BNNP**
1/2"	8 bar (125 PSIG)	Round		**P32RA94BNGP**	**P33RA94BNGP**
3/4"	8 bar (125 PSIG)	—			**P33RA96BNNP**
3/4"	8 bar (125 PSIG)	Round			**P33RA96BNGP**

Service kits

Description			P31	P32	P33
Regulator repair kit		Relieving	**P31KA00RB**	**P32KA00RB**	**P33KA00RB**
		Non-relieving	**P31KA00RC**	**P32KA00RC**	**P33KA00RC**
Panel mount nut		Aluminum	**P31KA00MM**	**P32KA00MM**	**P33KA00MM**
		Plastic	**P31KA00MP**	**P32KA00MP**	**P33KA00MP**
Angle bracket		Uses panel mount threads	**P31KA00MR**	**P32KA00MR**	**P33KA00MR**
T-bracket		With body connector	**P31KA00MT**	**P32KA00MT**	**P32KA00MT**
T-bracket					**P32KA00MB**
Body connector			**P31KA00CB**	**P32KA00CB**	**P32KA00CB**
Gauges -	Square flush mount gauge	0-4 bar	**K4511SCR04B**	**K4511SCR04B**	
		0-10 bar	**K4511SCR11B**	**K4511SCR11B**	
		0-60 PSIG	**K4511SCR060**	**K4511SCR060**	
		0-160 PSIG	**K4511SCR160**	**K4511SCR160**	
	1.00" round 1/8" center back mount	0-60 PSIG / 0-4 bar	**K4510N18060**		
		0-160 PSIG / 0-11 bar	**K4510N18160**		
	40mm round 1/8" center back mount	0-30 PSIG / 0-2 bar	**K4515N18030**		
		0-60 PSIG / 0-4 bar	**K4515N18060**		
		0-160 PSIG / 0-11 bar	**K4515N18160**		
	50mm (2") round 1/4" center back mount	0-30 PSIG / 0-2 bar / 0-0.2 MPa		**K4520N14030**	**K4520N14030**
		0-60 PSIG / 0-4 bar / 0-0.4 MPa		**K4520N14060**	**K4520N14060**
		0-160 PSIG / 0-11 bar / 0-1.1 MPa		**K4520N14160**	**K4520N14160**
		0-300 PSIG / 0-20 bar / 0-2 MPa		**K4520N14300**	**K4520N14300**
	44mm (1-3/4") digital round 1/4" center back mount	0-160 PSIG / 0-11 bar / 0-1.1 MPa		**K4517N14160**	**K4517N14160**

Most popular.

Parker Hannifin Corporation
Pneumatic Division
Richland, Michigan
www.parker.com/pneumatics

P31

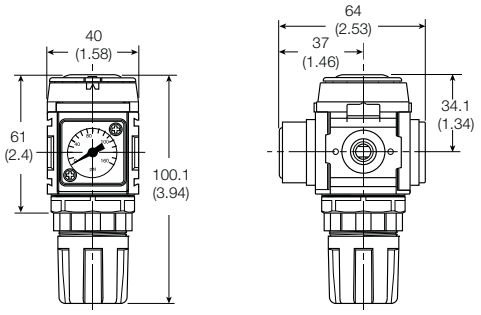

NOTE: 31.7 mm (1.25 in.) hole required for panel nut mounting.

P32

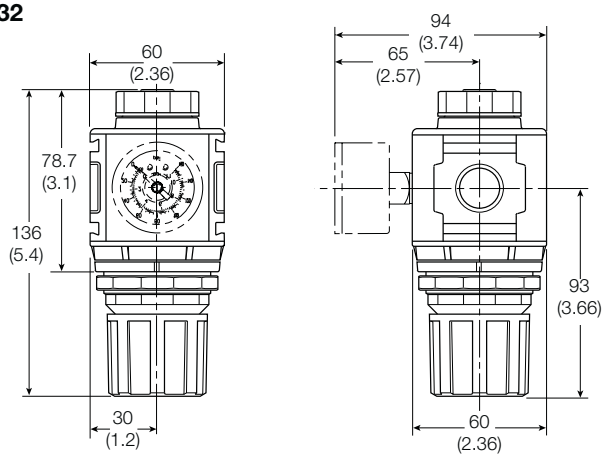

NOTE: 51 mm (2.00 in.) hole required for panel nut mounting.

P33

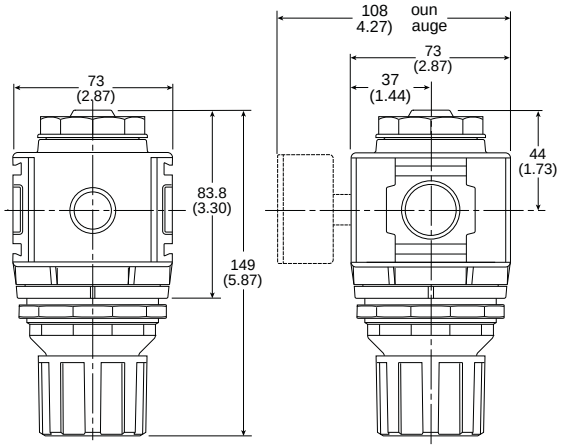

NOTE: 61 mm (2.40 in.) hole required for panel nut mounting.

Material specifications

Description	P31	P32	P33
Body	Aluminum	Aluminum	Aluminum
Adjustment knob	N/A	N/A	Acetal
Body cap	ABS	ABS	ABS
Bonnet	PBT	33% glass-filled nylon	33% glass-filled nylon
Diaphragm assembly	Brass / nitrile	Nitrile / zinc	Nitrile / zinc
Valve assembly	Brass / nitrile	Brass / nitrile	Brass / nitrile / acetal
Springs	Steel	Steel S.S. (main regulating valve)	Steel S.S. (main regulating valve)
Seals	Nitrile	Nitrile	Nitrile
Panel nut	Acetal	Acetal	Acetal

Parker Hannifin Corporation
Pneumatic Division
Richland, Michigan
www.parker.com/pneumatics

Global Modular Common Regulators

- Manifold style regulator with line pressure on both sides
- Pressure output is at front or rear
- Integral 1/4", 3/8" or 1/2" ports (NPT, BSPP & BSPT)
- Robust construction
- Secondary pressure ranges 0-2 bar (0-30 PSIG), 0-4 bar, (0-60 PSIG), 0-8 bar (0-125 PSIG), 0-17 bar (0-250 PSIG)
- Secondary aspiration plus balanced poppet provides quick response and accurate pressure regulation
- Relieving & Non-relieving types
- Non-rising knob

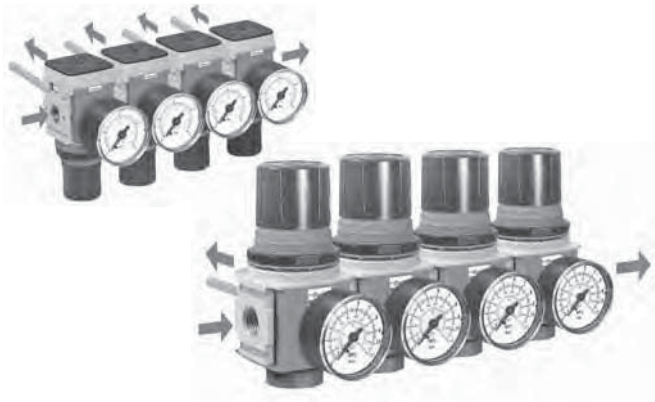

⚠ WARNING

Product rupture can cause serious injury.
Do not connect regulator to bottled gas.
Do not exceed maximum primary pressure rating.

CAUTION:

REGULATOR PRESSURE ADJUSTMENT –
The working range of knob adjustment is designed to permit outlet pressures within their full range. Pressure adjustment beyond this range is also possible because the knob is not a limiting device. This is a common characteristic of most industrial regulators, and limiting devices may be obtained only by special design.
For best performance, regulated pressure should always be set by increasing the pressure up to the desired setting.

Operating information

		P31 (Mini)	P32 (Compact)
Supply pressure (max):		20 bar (300 PSIG)	20 bar (300 PSIG)
Operating temperature:		-20°C to 65.5°C (-4°F to 150°F)	-25°C to 65.5°C (-13°F to 150°F)
Flow Capacity*:	1/4	18 dm^3/s* (38 SCFM)*	28 dm^3/s* (59 SCFM)*
	3/8	—	28 dm^3/s* (59 SCFM)*
	1/2	—	28 dm^3/s* (59 SCFM)*

* Inlet pressure 10 bar (145 PSIG). Secondary pressure 6.3 bar (91.3 PSIG), pressure drop 1 bar (14.7 PSIG)

For Flow Curve Charts please see page E36.

Ordering information

P31H A 9 2 B N N P

Basic series

Global modular mini common regulator	P31H
Global modular compact common regulator	P32H

Engr level

Current	A

Thread type

BSPP	**1**
BSPT	2
NPT	**9**

Port size

2	**1/4 (P31, P32)**
3	**3/8 (P32)**
4	**1/2 (P32)**

Relief

B	**Relieving**
N	**Non-relieving**

Adjustment range Without gauge

Y	**2 bar; 30 psig; 0.2 MPa**
L	**4 bar; 60 psig; 0.4 MPa**
N	**8 bar; 125 psig; 0.8 MPa**
H*	**17 bar; 250 psig; 1.7 MPa**

* Not available with P31 Series.
Order gauges separately - see next page.

Mounting

P	**Plastic panel mount nut**

Bold items are most common.

Regulators

Port size	Pressure	Part number P31	Part number P32
1/4"	8 bar (125 PSIG) relieving	**P31HA92BNNP**	**P32HA92BNNP**
3/8"	8 bar (125 PSIG) relieving		**P32HA93BNNP**
1/2"	8 bar (125 PSIG) relieving		**P32HA94BNNP**

Parker Hannifin Corporation
Pneumatic Division
Richland, Michigan
www.parker.com/pneumatics

P31

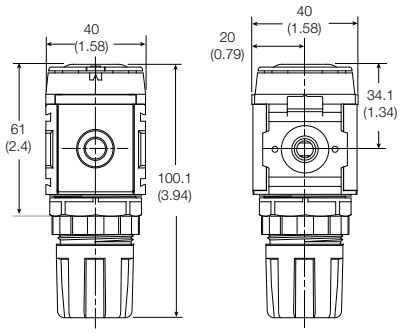

NOTE: 31.7 mm (1.25 in.) hole required for panel nut mounting.

P32

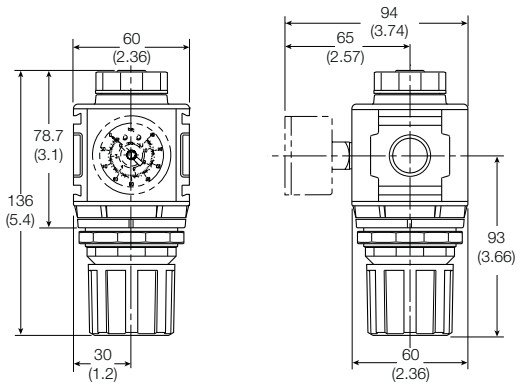

NOTE: 51 mm (2.00 in.)hole required for panel nut mounting.

Service kits

Description			P31	P32
Regulator repair kit	Relieving		**P31KA00RB**	**P32KA00RB**
	Non-relieving		**P31KA00RC**	**P32KA00RC**
Panel mount nut	Aluminum		**P31KA00MM**	**P32KA00MM**
	Plastic		**P31KA00MP**	**P32KA00MP**
Angle bracket (uses panel mount threads)			**P31KA00MR**	**P32KA00MR**
T-bracket	With body connector		**P31KA00MT**	**P32KA00MT**
	Fits to body connector		**P31KA00MB**	**P32KA00MB**
Body connector			**P31KA00CB**	**P32KA00CB**
Gauges -	Square flush mount gauge	0-4 bar	**K4511SCR04B**	**K4511SCR04B**
		0-10 bar	**K4511SCR11B**	**K4511SCR11B**
		0-60 PSIG	**K4511SCR060**	**K4511SCR060**
		0-160 PSIG	**K4511SCR160**	**K4511SCR160**
	Square with adapter kit	0-4 bar	**P6G-PR11040**	**P6G-PR11040**
		0-10 bar	**P6G-PR11100**	**P6G-PR11100**
		0-60 PSIG	**P6G-PR11P06**	**P6G-PR11P06**
		0-160 PSIG	**P6G-PR11P16**	**P6G-PR11P16**
	1.00" round 1/8" center back mount	0-60 PSIG / 0-4 bar	**K4510N18060**	
		0-160 PSIG / 0-11 bar	**K4510N18160**	
	50mm (2") round 1/4" center back mount	0-30 PSIG / 0-2 bar / 0-0.2 MPa		**K4520N14030**
		0-60 PSIG / 0-4 bar / 0-0.4 MPa		**K4520N14060**
		0-160 PSIG / 0-11 bar / 0-1.1 MPa		**K4520N14160**
		0-300 PSIG / 0-20 bar / 0-2 MPa		**K4520N14300**
	44mm (1-3/4") digital round 1/4" center back mount	0-160 PSIG / 0-11 bar / 0-1.1 MPa		**K4517N14160**

Material specifications

Description	P31	P32
Body	Aluminum	Aluminum
Adjustment knob	Acetal	Acetal
Bonnet	33% Glass-filled PBT	33% Glass-filled nylon
Diaphragm assembly	Brass / nitrile	Nitrile / zinc
Valve assembly	Brass / nitrile	Brass / nitrile
Springs		Steel S.S. (Main regulating valve)
Seals		Nitrile
Panel nut		Acetal

Most popular.

Parker Hannifin Corporation
Pneumatic Division
Richland, Michigan
www.parker.com/pneumatics

Global Modular Filter / Regulators

- Integral 1/4", 3/8", 1/2", 3/4" ports (NPT, BSPP & BSPT)
- High efficiency 5 micron element as standard
- Excellent water removal efficiency
- Robust but lightweight aluminum construction
- Positive bayonet latch to ensure correct & safe fitting
- Secondary pressure ranges 0-2 bar (0-30 PSIG), 0-4 bar, (0-60 PSIG), 0-8 bar (0-125 PSIG), 0-17 bar (0-250 PSIG)
- Secondary aspiration plus balanced poppet provides quick response and accurate pressure regulation

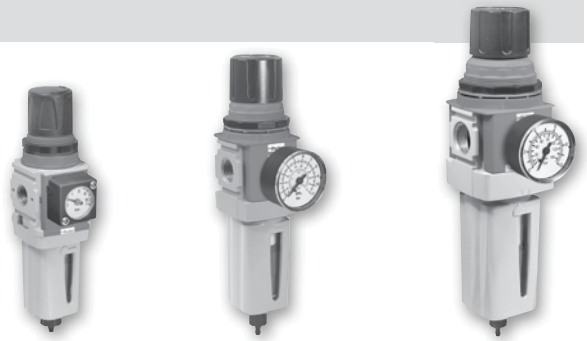

P31 P32 P33

⚠ WARNING

Product rupture can cause serious injury.
Do not connect regulator to bottled gas.
Do not exceed maximum primary pressure rating.

CAUTION:

REGULATOR PRESSURE ADJUSTMENT –
The working range of knob adjustment is designed to permit outlet pressures within their full range. Pressure adjustment beyond this range is also possible because the knob is not a limiting device. This is a common characteristic of most industrial regulators, and limiting devices may be obtained only by special design.
For best performance, regulated pressure should always be set by increasing the pressure up to the desired setting.

Operating information

		P31 (Mini)	P32 (Compact)	P33 (Standard)
Supply pressure (max):				
Plastic Bowl		10 bar (150 PSIG)	10 bar (150 PSIG)	10 bar (150 PSIG)
Metal Bowl		17 bar (250 PSIG)	17 bar (250 PSIG)	17 bar (250 PSIG)
Operating temperature:				
Plastic Bowl		-10°C to 52°C (14°F to 125°F)	-25°C to 52°C (-13°F to 125°F)	-25°C to 52°C (-13°F to 125°F)
Metal Bowl		-10°C to 65.5°C (14°F to 150°F)	-25°C to 65.5°C (-13°F to 150°F)	-25°C to 65.5°C (-13°F to 150°F)
Units with square gauges:		-15°C to 65.5°C (5°F to 150°F)		
Standard filtration:		5 micron	5 micron	5 micron
Flow Capacity*:	1/4	14 dm^3/s* (30 SCFM)*	42 dm^3/s* (89 SCFM)*	–
	3/8	–	58 dm^3/s* (123 SCFM)*	–
	1/2	–	64 dm^3/s* (136 SCFM)*	90 dm^3/s* (191 SCFM)*
	3/4	–	–	98 dm^3/s* (208 SCFM)*

* Inlet pressure 10 bar (145 PSIG). Secondary pressure 6.3 bar (91.3 PSIG), pressure drop 1 bar (14.7 PSIG)

For Flow Curve Charts please see page E37.

Ordering information

P31E A 9 2 E G M B N 5 P

Basic series

Global modular mini filter / regulator	P31E
Global modular compact filter / regulator	P32E
Global modular standard filter / regulator	P33E

Engr level

Current	A

Thread type

BSPP	1
BSPT	2
NPT	9

Port size

1/4 (P31, P32)	2
3/8 (P32)	3
1/2 (P32, P33)	4
3/4 (P33)	6

Element

5µ Element	E

Bowl type

Poly bowl with bowl guard	G
Metal bowl without sight gauge	M
Metal bowl with sight gauge	S

Drain type

M	Manual drain
A	Auto drain (P32, P33)
B	Pulse drain (P31)

Relief

B	Relieving
N	Non-relieving

Mounting

P	Plastic panel mount nut

Adjustment range

P31 & P32 with square gauge				With round gauge	
psig		bar		Z	2 bar; 30 psig; 0.2 MPa
1	= 30*	V	= 2*	M	4 bar; 60 psig; 0.4 MPa
3	= 60	S	= 4	G	8 bar; 125 psig; 0.8 MPa
5	= 125	T	= 8	J§‡	17 bar; 250 psig; 1.7 MPa
				Without gauge	
				Y	2 bar; 30 psig; 0.2 MPa
				L	4 bar; 60 psig; 0.4 MPa
				N	8 bar; 125 psig; 0.8 MPa
				H§‡	17 bar; 250 psig; 1.7 MPa

* Unit comes with 0-4 bar or 0-60 psig gauge respectively.
§ Not available with poly bowl with bowl guard.
‡ Not available with P31 Series.

Bold items are most common.

Parker Hannifin Corporation
Pneumatic Division
Richland, Michigan
www.parker.com/pneumatics

Filter / Regulator

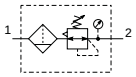

Port size	Pressure (relieving)	Bowl type	Drain type	Part number P31	P32	P33
1/4"	8 bar (125 PSIG)	Poly	Manual	**P31EA92EGMBN5P**	**P32EA92EGMBNGP**	
1/4"	8 bar (125 PSIG)	Poly	Pulse	**P31EA92EGBBN5P**		
1/4"	8 bar (125 PSIG)	Poly	Auto		**P32EA92EGMBNGP**	
1/4"	8 bar (125 PSIG)	Metal	Manual	**P31EA92EMMBN5P**	**P32EA92ESMBNGP**	
1/4"	8 bar (125 PSIG)	Metal	Pulse	**P31EA92EMBBN5P**		
1/4"	8 bar (125 PSIG)	Metal	Auto		**P32EA92ESABNGP**	
3/8"	8 bar (125 PSIG)	Poly	Manual		**P32EA93EGMBNGP**	
3/8"	8 bar (125 PSIG)	Poly	Auto		**P32EA93EGABNGP**	
3/8"	8 bar (125 PSIG)	Metal	Manual		**P32EA93ESMBNGP**	
3/8"	8 bar (125 PSIG)	Metal	Auto		**P32EA93ESABNGP**	
1/2"	8 bar (125 PSIG)	Poly	Manual		**P32EA94EGMBNGP**	**P33EA94EGMBNGP**
1/2"	8 bar (125 PSIG)	Poly	Auto		**P32EA94EGABNGP**	**P33EA94EGABNGP**
1/2"	8 bar (125 PSIG)	Metal	Manual		**P32EA94ESMBNGP**	**P33EA94ESMBNGP**
1/2"	8 bar (125 PSIG)	Metal	Auto		**P32EA94ESABNGP**	**P33EA94ESABNGP**
3/4"	8 bar (125 PSIG)	Poly	Manual			**P33EA96EGMBNGP**
3/4"	8 bar (125 PSIG)	Poly	Auto			**P33EA96EGABNGP**
3/4"	8 bar (125 PSIG)	Metal	Manual			**P33EA96ESMBNGP**
3/4"	8 bar (125 PSIG)	Metal	Auto			**P33EA96ESABNGP**

Most popular.

Service kits

Description		P31	P32	P33
Plastic bowl / bowl guard	Manual drain	**P31KA00BGM**	**P32KA00BGM**	**P33KA00BGM**
	Pulse drain	**P31KA00BGB**		
	Auto drain		**P32KA00DA**	**P32KA00DA**
Metal bowl w/o sight gauge	Manual drain	**P31KA00BMM**		
	Pulse drain	**P31KA00BMB**		
	Auto drain		**P32KA00DA**	**P32KA00DA**
Metal bowl / sight gauge	Manual drain		**P32KA00BSM**	**P33KA00BSM**
	Auto drain		**P32KA00DA**	**P32KA00DA**
Filter element	5µ particulate	**P31KA00ESE**	**P32KA00ESE**	**P33KA00ESE**
Regulator repair kit	Relieving	**P31KB00RB**	**P32KB00RB**	**P33KA00RB**
	Non-relieving	**P31KB00RC**	**P32KB00RC**	**P33KA00RC**
Panel mount nut	Aluminum	**P31KA00MM**	**P32KA00MM**	**P331KA00MM**
	Plastic	**P31KA00MP**	**P32KA00MP**	**P33KA00MP**
Angle bracket (uses panel mount threads)		**P31KA00MR**	**P32KA00MR**	**P33KA00MR**
C-bracket	Fits to body	**P31KA00MW**		
T-bracket	Fits to body connector		**P32KA00MB**	**P32KA00MB**
	With body connector	**P31KA00MT**	**P32KA00MT**	**P32KA00MT**
Body connector		**P31KA00CB**	**P32KA00CB**	**P32KA00CB**
Gauges - square flush mount gauge	0-4 bar	**K4511SCR04B**		
	0-10 bar	**K4511SCR11B**		
	0-60 PSIG	**K4511SCR060**		
	0-160 PSIG	**K4511SCR160**		
50mm (2") round 1/4" center back mount	0-30 PSIG / 0-2 bar / 0-0.2 MPa		**K4520N14030**	**K4520N14030**
	0-60 PSIG / 0-4 bar / 0-0.4 MPa		**K4520N14060**	**K4520N14060**
	0-160 PSIG / 0-11 bar / 0-1.1 MPa		**K4520N14160**	**K4520N14160**
	0-300 PSIG / 0-20 bar / 0-2 MPa		**K4520N14300**	**K4520N14300**
44mm (1-3/4") digital round 1/4" center back mount	0-160 PSIG / 0-11 bar / 0-1.1 MPa		**K4517N14160**	

Parker Hannifin Corporation
Pneumatic Division
Richland, Michigan
www.parker.com/pneumatics

P31

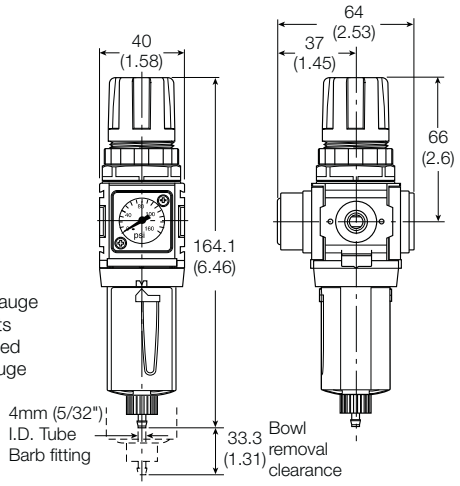

Note:
Flush-mounted gauge kits will not fit units originally purchased with threaded gauge ports.

P32

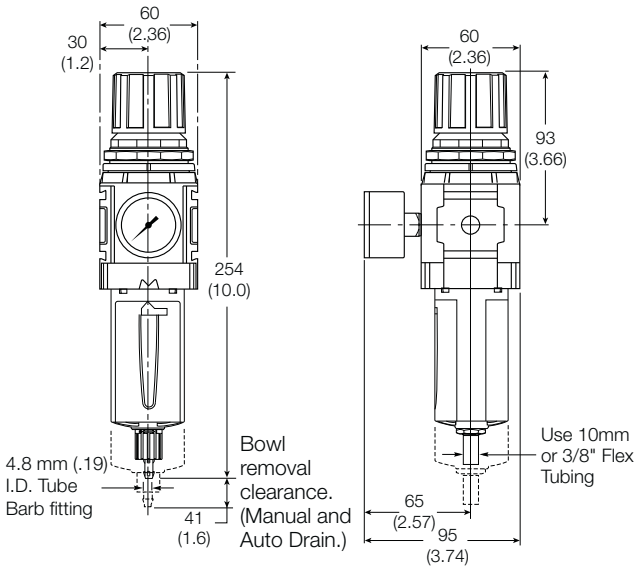

Manual Drain **Auto Drain**

P33

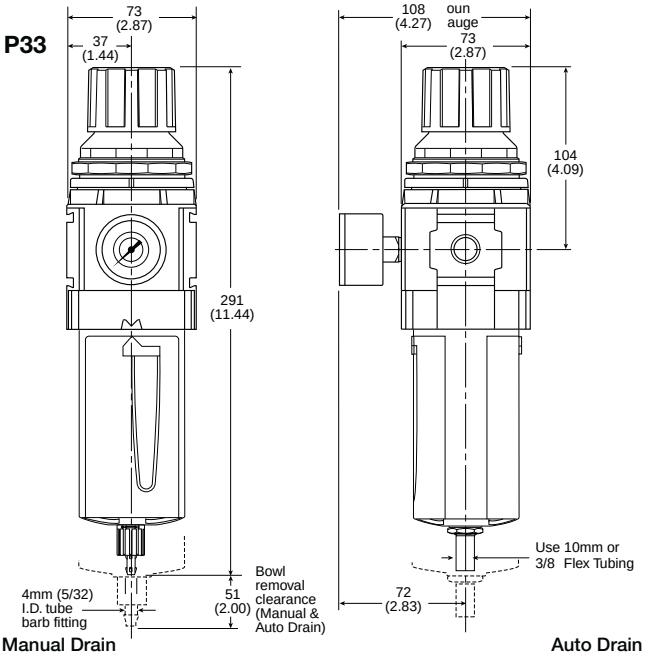

Manual Drain **Auto Drain**

Material Specifications

Description		P31	P32	P33
Body		Aluminum	Aluminum	Aluminum
Adjustment knob		Acetal	Acetal	Acetal
Body cap		ABS	ABS	ABS
Bonnet		PBT	33% glass-filled nylon	33% glass-filled nylon
Element retainer/baffle		N/A	Acetal	Acetal
Bowl	Plastic bowl	Polycarbonate	Polycarbonate	Polycarbonate
	Metal bowl	Aluminum	Zinc	Aluminum
Bowl guard		Nylon	Nylon	Nylon
Filter element		Sintered polyethylene	Sintered polyethylene	Polyethylene
Seals		Nitrile	Nitrile	Nitrile
Springs	Main regulating / valve	Steel	Steel / S.S.	Steel
Valve assembly		Brass / nitrile	Brass / nitrile	Brass / nitrile
Diaphragm assembly		Brass / nitrile	Nitrile / zinc	Nitrile / zinc
Panel nut		Acetal	Acetal	Acetal
Sight gauge	Metal bowl	N/A	Polycarbonate	Polycarbonate

Parker Hannifin Corporation
Pneumatic Division
Richland, Michigan
www.parker.com/pneumatics

Global Modular Lubricators

- Integral 1/4", 3/8", 1/2", 3/4" ports (NPT, BSPP & BSPT)
- Robust but lightweight aluminum construction
- Proportional oil delivery over a wide range of air flows
- Finger tip ratchet control for precise oil drip rate adjustment

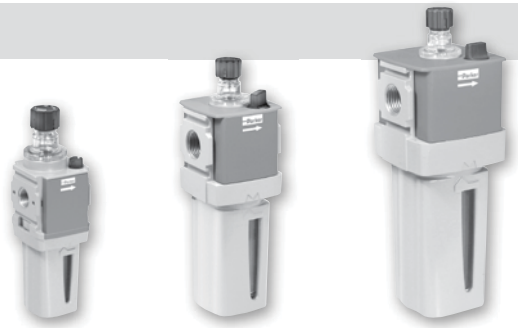

P31 **P32** **P33**

Operating information

Supply pressure (max):	Plastic Bowl	10 bar (150 PSIG)
	Metal Bowl	17 bar (250 PSIG)
Operating temperature:	Plastic Bowl	-10°C to 52°C (14°F to 125°F)
	Metal Bowl	-10°C to 65.5°C (14°F to 150°F)
Standard filtration:	5 micron	

		P31 (Mini)	P32 (Compact)	P33 (Standard)
Flow Capacity*:	1/4	13 dm^3/s (28 SCFM)	18 dm^3/s (38 SCFM)	–
	3/8	–	32 dm^3/s (68 SCFM)	–
	1/2	–	47 dm^3/s (100 SCFM)	48 (102 SCFM)
	3/4	–	–	68 dm^3/s (144 SCFM)

* Inlet pressure 6.3 bar (91.3 PSIG), pressure drop 0.34 bar (4.9 PSIG).

For Flow Curve Charts please see page E38.

Ordering information

P31L A 9 2 L G N N

Basic series

Global modular mini lubricator	P31L
Global modular compact lubricator	P32L
Global modular standard lubricator	P33L

Engr level

Current	A

Thread type

BSPP	**1**
BSPT	2
NPT	**9**

Port size

1/4 (P31, P32)	**2**
3/8 (P32)	**3**
1/2 (P32, P33)	**4**
3/4 (P33)	**6**

Lube type

L	**Oil mist standard sight dome**

Bowl type

G	**Poly bowl with bowl guard**
M	Metal bowl without sight gauge
S*	**Metal bowl with sight gauge**

* Not available with P31 Series.

Drain type

N	**No drain closed end**

Mounting

N	**No bracket**

Bold items are most common.

Parker Hannifin Corporation
Pneumatic Division
Richland, Michigan
www.parker.com/pneumatics

Lubricators

Port size	Bowl type	Type	Part number P31	P32	P33
1/4"	Poly / no drain	Mist	**P31LA92LGNN**	**P32LA92LGNN**	
1/4"	Metal / no drain	Mist / sight gauge	**P31LA92LMNN**	**P32LA92LSNN**	
3/8"	Poly / no drain	Mist		**P32LA93LGNN**	
3/8"	Metal / no drain	Mist / sight gauge		**P32LA93LSNN**	
1/2"	Poly / no drain	Mist		**P32LA94LGNN**	**P33LA94LGNN**
1/2"	Metal / no drain	Mist / sight gauge		**P32LA94LSNN**	**P33LA94LSNN**
3/4"	Poly / no drain	Mist			**P33LA96LGNN**
3/4"	Metal / no drain	Mist / sight gauge			**P33LA96LSNN**

Service kits

Description		P31	P32	P33
Plastic bowl / bowl guard / no drain		**P31KA00BGN**	**P32KA00BGN**	**P33KA00BGN**
Drip control assembly		**P32KA00PG**	**P32KA00PG**	**P32KA00PG**
Fill plug		**P31KA00PL**	**P32KA00PL**	**P32KA00PL**
C-bracket	Fits to body	**P31KA00MW**		
L-bracket			**P32KA00ML**	**P33KA00ML**
T-bracket	Fits to body connector		**P32KA00MB**	**P32KA00MB**
	With body connector	**P31KA00MT**	**P32KA00MT**	**P32KA00MT**
Body connector		**P31KA00CB**	**P32KA00CB**	**P32KA00CB**
Lubricant* (1 quart)		**F442001**	**F442001**	**F442001**

* Petroleum based oil of 100 to 200 SUS viscosity at 38°C (100°F) and an aniline point greater than 93°C (200°F). **DO NOT USE OILS WITH ADDITIVES,COMPOUNDED OILS CONTAINING SOLVENTS, GRAPHITE, DETERGENTS, OR SYNTHETIC OILS.**

Most popular.

Parker Hannifin Corporation
Pneumatic Division
Richland, Michigan
www.parker.com/pneumatics

P31

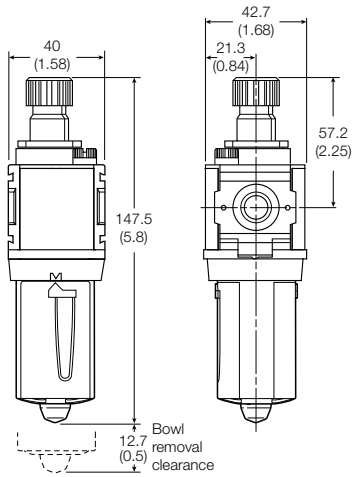

P33

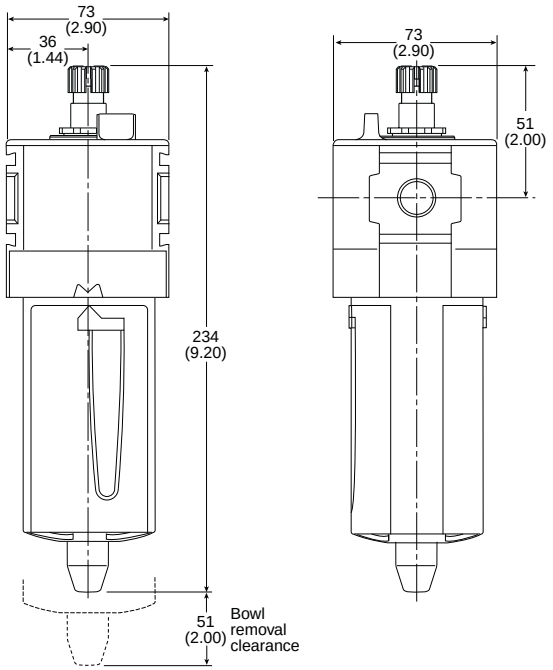

P32

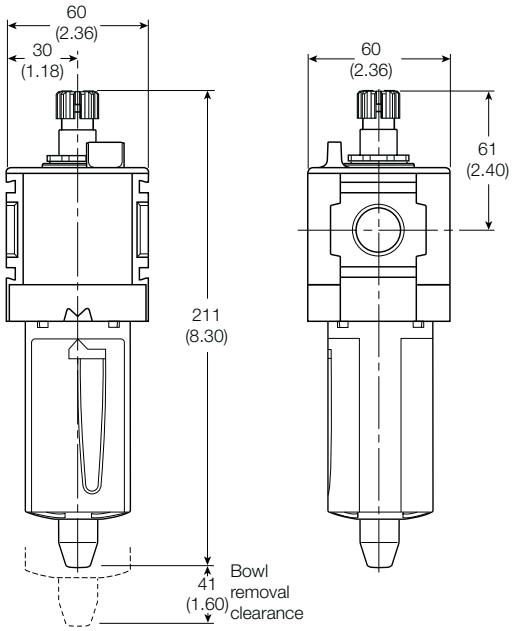

Material Specifications

Description		P31	P32	P33
Body		Aluminum	Aluminum	Aluminum
Body cap		N/A	N/A	ABS
Bowl	Plastic bowl	Polycarbonate	Polycarbonate	Polycarbonate
	Metal bowl	Aluminum	Aluminum	Aluminum
Bowl guard		Nylon	Nylon	Nylon
Seals		Nitrile	Nitrile	Nitrile
Sight dome		Polycarbonate	Polycarbonate	Polycarbonate
Suggested lubricant		ISO / ASTM VG32	ISO / ASTM VG32	ISO / ASTM VG32
Pick-up filter		Sintered bronze	Sintered bronze	Sintered bronze
Sight gauge	Metal bowl	N/A	Polycarbonate	Polycarbonate

Parker Hannifin Corporation
Pneumatic Division
Richland, Michigan
www.parker.com/pneumatics

Global Modular Combinations

Filter + Regulator + Lubricator Combinations + Poly Bowl

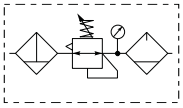

5 micron element, 8 bar (116 PSIG) Regulator + Gauge and Wall Mounting Brackets
Inlet pressure 10 bar (145 PSIG), Secondary pressure 6.3 bar (91.3 PSIG),
1 bar (14.5 PSIG) pressure drop.

Port size	Drain type	Part number		
		P31 Series	P32 Series	P33 Series
1/4"	Manual	**P31CB92GEMN5LNW**	**P32CB92GEMNGLNW**	
1/4"	Pulse	**P31CB92GEBN5LNW**		
1/4"	Auto		**P32CB92GEANGLNW**	
3/8"	Manual		**P32CB93GEMNGLNW**	
3/8"	Auto		**P32CB93GEANGLNW**	
1/2"	Manual		**P32CB94GEMNGLNW**	**P33CB94GEMNGLNW**
1/2"	Auto		**P32CB94GEANGLNW**	**P33CB94GEANGLNW**
3/4"	Manual			**P33CB96GEMNGLNW**
3/4"	Auto			**P33CB96GEANGLNW**

Filter / Regulator + Lubricator Combinations + Poly Bowl

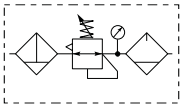

5 micron element, 8 bar (116 PSIG) Regulator + Gauge and Wall Mounting Brackets
Inlet pressure 10 bar (145 PSIG), Secondary pressure 6.3 bar (91.3 PSIG),
1 bar (14.5 PSIG) pressure drop.

Port size	Drain type	Part number		
		P31 Series	P32 Series	P33 Series
1/4"	Manual	**P31CA92GEMN5LNW**	**P32CA92GEMNGLNW**	
1/4"	Pulse	**P31CA92GEBN5LNW**		
1/4"	Auto		**P32CA92GEANGLNW**	
3/8"	Manual		**P32CA93GEMNGLNW**	
3/8"	Auto		**P32CA93GEANGLNW**	
1/2"	Manual		**P32CA94GEMNGLNW**	**P33CA94GEMNGLNW**
1/2"	Auto		**P32CA94GEANGLNW**	**P33CA94GEANGLNW**
3/4"	Manual			**P33CA96GEMNGLNW**
3/4"	Auto			**P33CA96GEANGLNW**

⚠ WARNING

Product rupture can cause serious injury.
Do not connect regulator to bottled gas.
Do not exceed maximum primary pressure rating.

CAUTION:

REGULATOR PRESSURE ADJUSTMENT –
The working range of knob adjustment is designed to permit outlet pressures within their full range. Pressure adjustment beyond this range is also possible because the knob is not a limiting device. This is a common characteristic of most industrial regulators, and limiting devices may be obtained only by special design.
For best performance, regulated pressure should always be set by increasing the pressure up to the desired setting.

☐ Most popular.

Parker Hannifin Corporation
Pneumatic Division
Richland, Michigan
www.parker.com/pneumatics

Ordering information

Filter / Regulator coding
(use with codes: A M)

Filter coding
(use with combo codes: B F G). For multiple filters, repeat as needed

Regulator coding
(use with combo code: B)

Lubricator coding
(use with combo codes: A B)

Assembly configuration

P31 C B 9 2 G

Combination	
B/V + Combination	Q*
Combination + B/V*	X
Combination	C

* B/V = Ball valve.

Thread type	
BSPP	1
BSPT	2
NPT	9

Combination type*			
F/R+L	A	F+Fc+Fa	G
F+R+L	B	F/R+Fc	M
F+Fc	F	F+Fc1+Fc	Q

*** Combination type**
F = 5µ
Fc1 = 1µ
Fc = .01µ
Fa = Adsorber

Port size	
1/4 (P31, P32)	2
3/8 (P32)	3
1/2 (P32, P33)	4
3/4 (P33)	6

Bowl type	
Poly bowl with bowl guard	G
Metal bowl without sight gauge	M*
Metal bowl with sight gauge	S‡

* Not available when using lubricator.
‡ Not available with P31 Series.

Note: All bowl types are the same for each component.
Example: If a "G" is specified for a F+L, both units would get a poly bowl with bowl guard.

Bold items are most common.

E M

Element	
0.01µ Element	C
0.01µ Element with DPI	D*
5µ Element	E
5µ Element with DPI	F*†
1µ Element	9
1µ Element with DPI	Q*
Adsorber	A

* Not available with F/R.

Drain type	
Auto drain	A†
Manual drain	M
Pulse drain	B

† Not available on P31 Series

N 5

Relief adjustment	
Non-rising knob relieving	N

Adjustment range			
P31 & P32 with square gauge		With round gauge	
psig	bar	Z	2 bar; 30 psig; 0.2 MPa
1 = 30*	V = 2*	M	4 bar; 60 psig; 0.4 MPa
3 = 60	S = 4	G	8 bar; 125 psig; 0.8 MPa
5 = 125	T = 8	J§‡	17 bar; 250 psig; 1.7 MPa
		Without gauge	
		Y	2 bar; 30 psig; 0.2 MPa
		L	4 bar; 60 psig; 0.4 MPa
		N	8 bar; 125 psig; 0.8 MPa
		H§‡	17 bar; 250 psig; 1.7 MPa

* Unit comes with 0-4 bar or 0-60 psig gauge respectively.
§ Not available with poly bowl with bowl guard.
‡ Not available with P31 Series.

L N

Lube type	
Oil mist standard sight dome	L

Drain type	
No drain closed end	N

W

Mounting	
No bracket	A
Port blocks	C*
Port blocks with wall brkt	D*
Wall bracket	W

* For P31 Series 3/8" Port Blocks please order separately.
See Kits section.

Parker Hannifin Corporation
Pneumatic Division
Richland, Michigan
www.parker.com/pneumatics

P31C

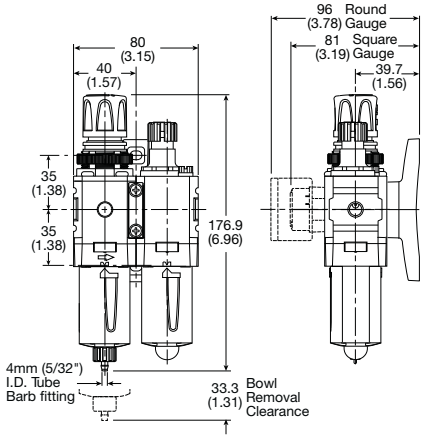

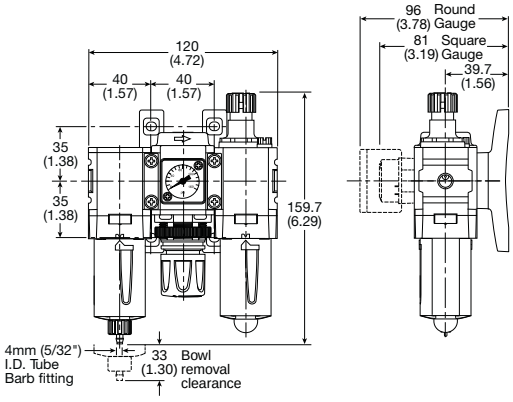

P32C

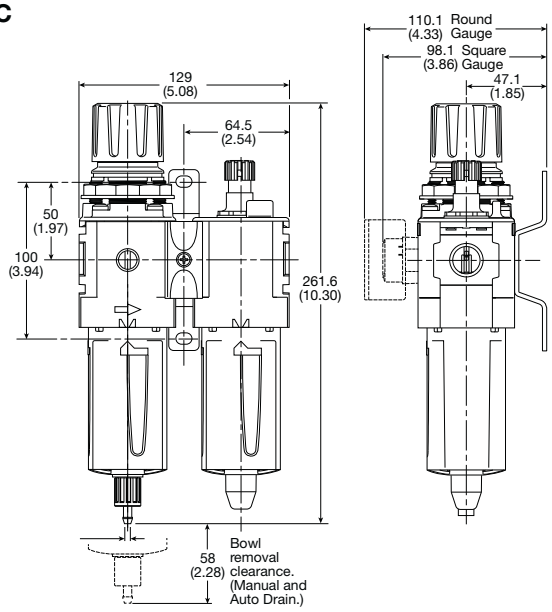

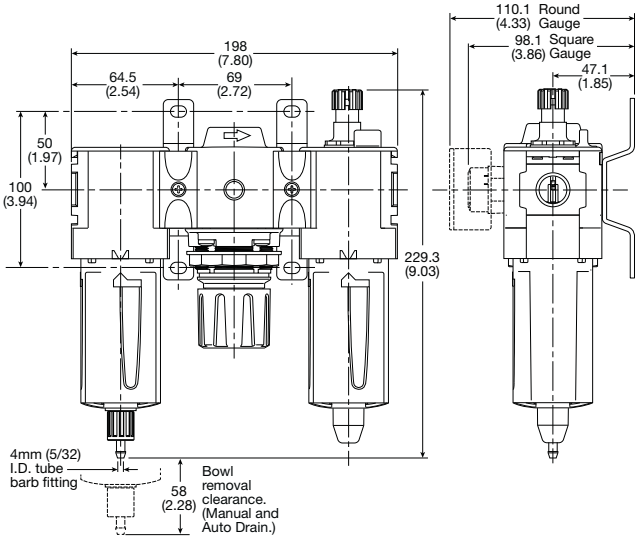

P33C

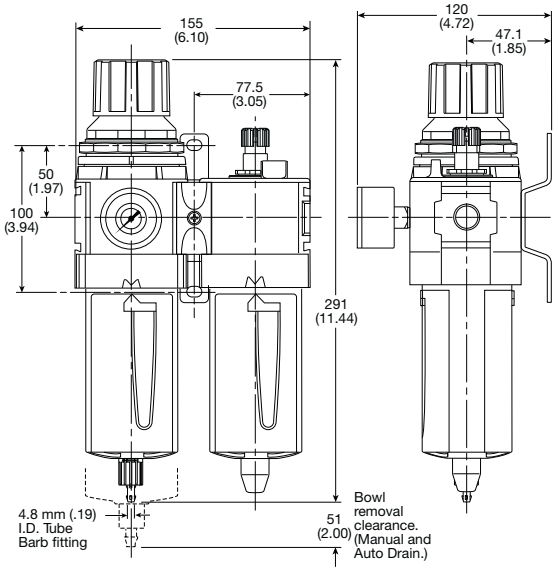

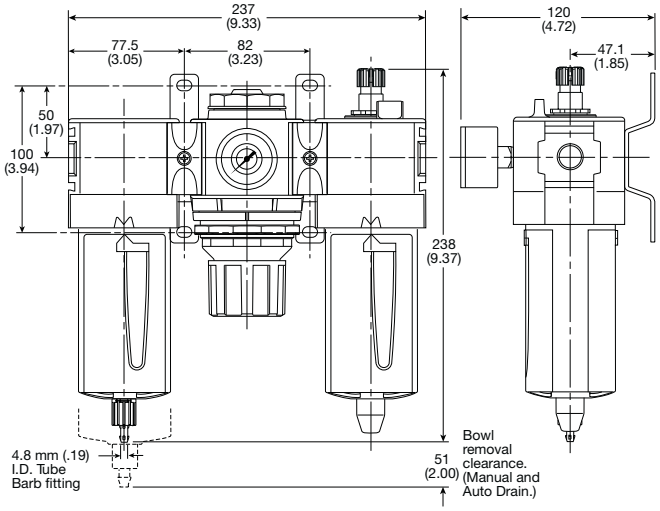

Parker Hannifin Corporation
Pneumatic Division
Richland, Michigan
www.parker.com/pneumatics

Global Modular Electronic Proportional Regulators

- Very fast response times
- Accurate output pressure
- Micro parameter settings
- Selectable I/O parameters
- Quick, full flow exhaust
- LED display indicates output pressure
- No air consumption in steady state
- Multiple mounting options
- Protection to IP65
- P31P flows to 19 dm3/s (40 SCFM)
- P32P flows to 57 dm3/s (120 SCFM)

P31PA Series
Bottom exhaust

P32PA Series
Bottom exhaust

Ordering information

P31P A 9 2 A D 2 V D 1 ☐

Body size	
Global modular mini (1/4")	P31P
Global modular compact (1/2")	P32P

Engr level	
Current	A

Thread type	
BSPP	**1**
BSPT	2
NPT	**9**

Port size	
Global modular mini (1/4")	2
Global modular compact (1/2")	4

Version	
Bottom ported exhaust (NC)	A
Bottom ported forced exhaust (NO)†	E

† When the supply voltage is lost the unit will automatically exhaust the regulated pressure to 0 bar (atmospheric pressure)

Pressure range	
Z	0 - 2 bar (0-29 PSIG)
D	0 - 10 bar (0-145 PSIG)

Power supply	
2	24 volts

Control signal	
V	0-10V‡

‡ Factory setting is 0-10 V control signal. 4-20 mA control signal available via parameter 4 on keypad.

Input Connector	
1	M12 (4-pin)

Output signal	
D	Digital, PNP
P	PNP or 0-10V
N	NPN or 0-10V
M	4-20mA fixed

D) Digital PNP output only, no analog output selectable
P) Digital PNP and analogue 0-10V outputs selectable, by means of parameter 6. (Factory default 0-10V)
N) Digital NPN and analog 0-10 V outputs selectable by means of parameter 6. Factory default 0-10V)
M) Analog 4-20mA output only.
Note: On all analog outputs the F.S. value can be adjusted by means of parameter 8.

Bold items are most common.

P31P mounting brackets

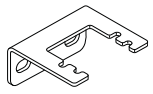

L-bracket

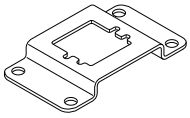

Foot bracket

Description	Part number
L-bracket mounting kit	**P3HKA00ML**
Foot bracket mounting kit	**P3HKA00MC**

P32P mounting brackets

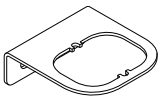

L-bracket

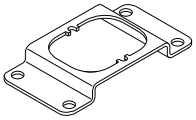

Foot bracket

Description	Part number
L-bracket mounting kit	**P3KKA00ML**
Foot bracket mounting kit	**P3KKA00MC**

Cables

Part number	Description
CB-M12-4P-2M	2 mtr. cable with moulded straight M12x1 connector

☐ Most popular.

For Flow Curve Charts please see page E39.

Parker Hannifin Corporation
Pneumatic Division
Richland, Michigan
www.parker.com/pneumatics

Technical information

Working medium
Compressed air or inert gasses, filtered to 40µ.

Supply pressure
Max. operating pressure:
2 bar unit: .....3 bar (43.5 PSIG)
10 bar unit: .....10.5 bar (152 PSIG)
Min. Operating Pressure ..... P2 pressure + 0.5 bar (7.3 PSIG)

Pressure control range
Available in three pressure ranges, 0-2 bar (0-29 PSIG), 0-7 bar (0-101.5 PSIG) or 0-10 bar (0-145 PSIG). Pressure range can be changed through the software at all times. (parameter 19)

Temperature range
0°C up to +50°C (32°F up to 122°F)

Weights:
P31P = 0.291 kg (0.64 lbs)
P32P = 0.645 kg (1.42 lbs)

Air consumption
No consumption in stable regulated situation.

Display
The regulator is provided with a digital display, indicating the output pressure, either in bar or PSIG.
The factory setting is as indicated on the label, can be changed through to software at all times (parameter 14)

⚠ WARNING

Product rupture can cause serious injury.
Do not connect regulator to bottled gas.
Do not exceed maximum primary pressure rating.

Supply voltage
24 VDC +/- 10%

Power consumption
Max. 1.1W with unloaded signal outputs

Control signals
The electronic pressure regulator can be externally controlled through an analogue control signal of either 0-10V or 4-20mA. (parameter 4).

Output signals
As soon as the output pressure is within the signal band a signal is given of 24VDC, PNP Ri = 1 kOhm
Outside the signal band this connection is 0V.

Connections
(In case of output signal (Option D)
Central M12 connector 4-pole

The electrical connections are as follows:

Pin No.		Function	Color
1	24 V	Supply	Brown
2	0 to 10 V	Control Signal Ri = 100k Ω	White
	4 to 20mA	Control Signal Ri = 500 Ω	
3	0 V (GND)	Supply	Blue
4	24 V	Alarm Output Signal	Black

P31P

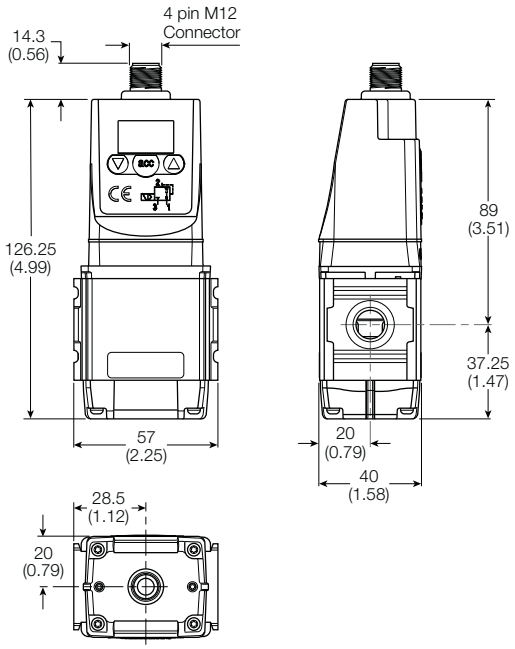

P32P

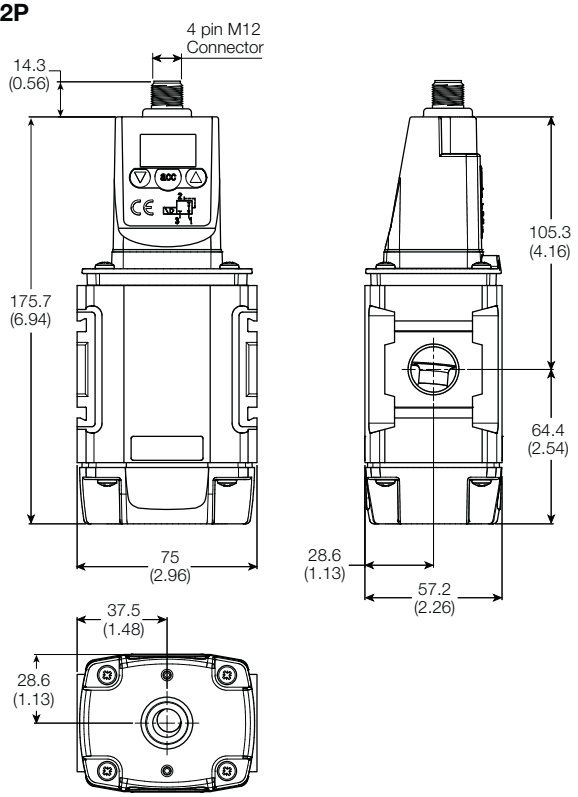

Parker Hannifin Corporation
Pneumatic Division
Richland, Michigan
www.parker.com/pneumatics

Global Modular Soft Start / Dump Valves

- Modular design with 1/4" or 1/2" integral ports (NPT, BSPP & BSPT)
- The 3-way, 2-position function automatically dumps downstream pressure on the loss of pilot signal
- Adjustable slow start
- Solenoid or air pilot options
- High flow & exhaust capability
- Silencer included

P31TA Series shown
Bottom exhaust

P32TA Series shown
Bottom exhaust

Operating information

Operating pressure (max):	Solenoid Air pilot	10 bar (150 PSIG) 17 bar (250 PSIG)
Operating pressure (min):		3 bar (44 PSIG)
Operating temperature (max):	Solenoid Air pilot	50°C (122°F) 80°C (176°F)
Flow Capacity*:	P31 Series P32 Series	17 dm^3/s (36 SCFM) 48 dm^3/s (97 SCFM)

*Inlet pressure 6.3 bar (91.3 PSIG), pressure drop 1 bar (14.5 PSIG).

For Flow Curve Charts please see page E39.

Ordering information

P31T A 9 2 S G N — **C 2CN**

Solenoid type only

Body size	
Combined soft start / dump valve (1/4")	P31T
Combined soft start / dump valve (1/2")	P32T
Dump valve (1/4")	P31D
Dump valve (1/2")	P32D
Soft start	P31S
Soft start	P32S

Engr level	
Current	A

Thread type	
BSPP	1
BSPT	2
NPT	9

Port size	
Global modular mini (1/4")	2
Global modular compact (1/2")	4

Pilot type	
P	External air pilot
S	Solenoid pilot
Y*	Internal air pilot

* Only available on P31SA & P32SA Dump Valves.

Actuator interface	
0	Internal Pilot
G	15mm solenoid (P31 only)
C	30mm solenoid
P*	Threaded air pilot

* Only available on P31SA & P32SA Dump Valves.

Solenoid type	
C	15mm (P31 series only)
A	30mm CNOMO coil (P32 only)
D	30mm CNOMO coil (M12 connection) (P32 only)

Solenoid voltage	
2CN	24VDC non locking manual overide
3GN	120VAC non locking manual overide
1FN	120VAC non locking manual override (P31 series only)

Note:
P32 unit used for both P32 & P33 series

Bold items are most common.

Parker Hannifin Corporation
Pneumatic Division
Richland, Michigan
www.parker.com/pneumatics

Combined soft start / Dump valves (P31T / P32T)

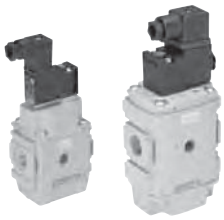

Port size	Description	Part number
1/4"	120VAC Solenoid & cable plug	**P31TA92SGNC1FN**
1/4"	24VDC Solenoid & cable plug	**P31TA92SGNC2CN**
1/4"	External air pilot operated	**P31TA92PPN**
1/2"	120VAC 30mm coil & cable plug included	**P32TA94SCNA3GN**
1/2"	24VDC 30mm coil & cable plug included	**P32TA94SCNA2CN**
1/2"	External air pilot operated	**P32TA94PPN**

Note: Includes exhaust silencer. Flow with 6.3 bar (91.3) PSIG) inlet and 1 bar (14.5 PSIG) pressure drop.

Dump valves (P31D / P32D)

Port size	Description	Part number
1/4"	120VAC Solenoid & cable plug	**P31DA92SGNC1FN**
1/4"	24VDC Solenoid & cable plug	**P31DA92SGNC2CN**
1/4"	External air pilot operated	**P31DA92PPN**
1/2"	120VAC 30mm coil & cable plug included	**P32DA94SCNA3GN**
1/2"	24VDC 30mm coil & cable plug included	**P32DA94SCNA2CN**
1/2"	External air pilot operated	**P32DA94PPN**

Note: Includes exhaust silencer.

Soft starts (P31S / P32S)

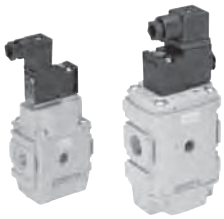

Port size	Description	Part number
1/4"	120VAC Solenoid & cable plug	**P31SA92SGNC1FN**
1/4"	24VDC Solenoid & cable plug	**P31SA92SGNC2CN**
1/4"	Internal air pilot operated	**P31SA92Y0N**
1/4"	External air pilot operated	**P31SA92PPN**
1/2"	120VAC 30mm coil & cable plug included	**P32SA94SCNA3GN**
1/2"	Internal air pilot operated	**P32SA92Y0N**
1/2"	24VDC 30mm coil & cable plug included	**P32SA94SCNA2CN**
1/2"	External air pilot operated	**P32SA94PPN**

Material specifications

Body	Aluminum
Body cover	Polyester
Seals	Nitrile NBR

P31P mounting brackets

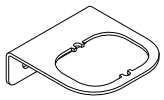

L-bracket

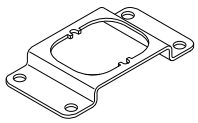

Foot bracket

Description	Part number
L-bracket mounting kit	**P3HKA00ML**
Foot bracket mounting kit	**P3HKA00MC**

Most popular.

Note:
For solenoid operators and cable plugs (connectors) see pages E28 to E29.

Parker Hannifin Corporation
Pneumatic Division
Richland, Michigan
www.parker.com/pneumatics

P31T

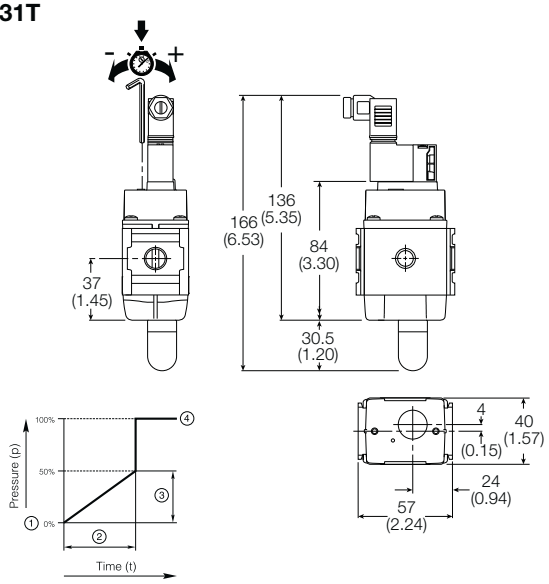

P32T

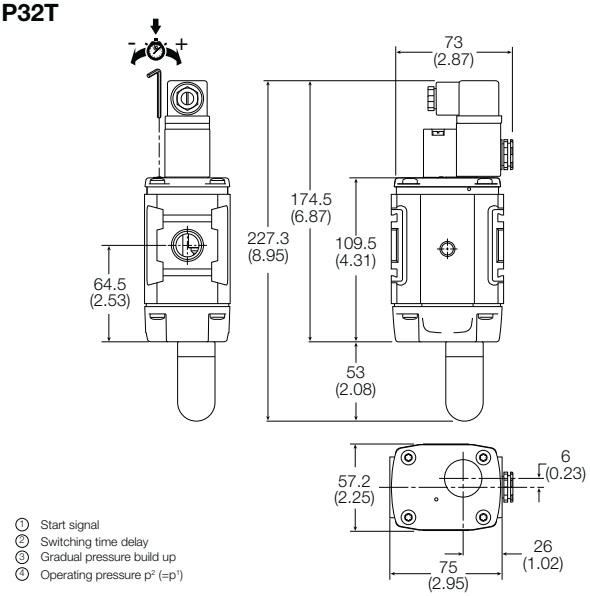

① Start signal
② Switching time delay
③ Gradual pressure build up
④ Operating pressure p^2 (=p^1)

P31D

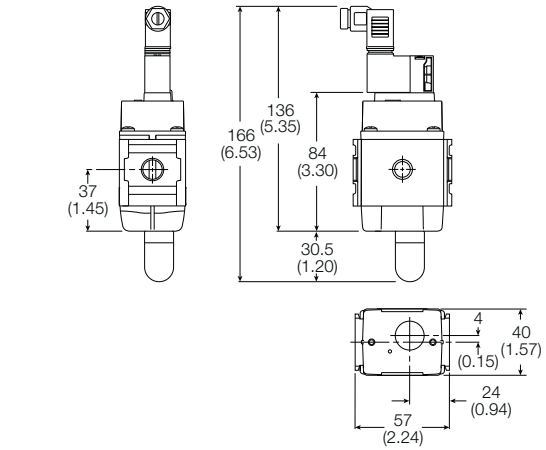

P32D

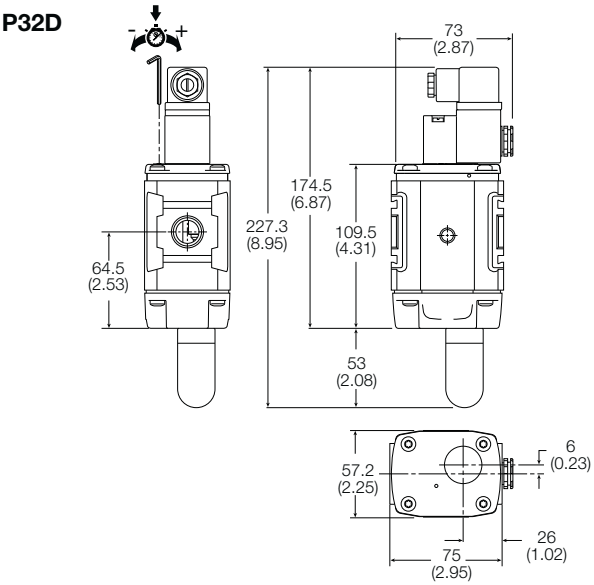

P31S

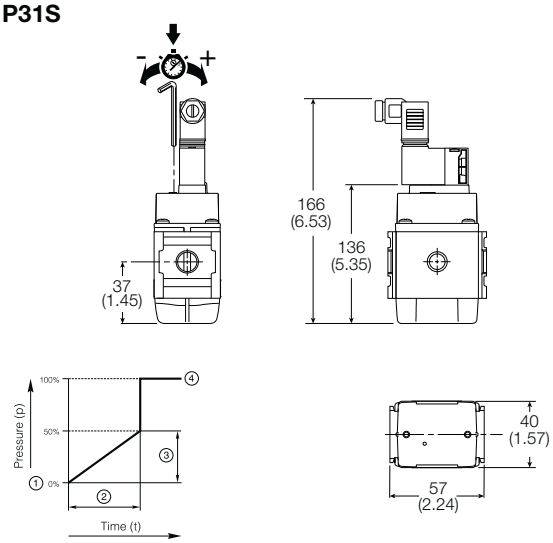

P32S

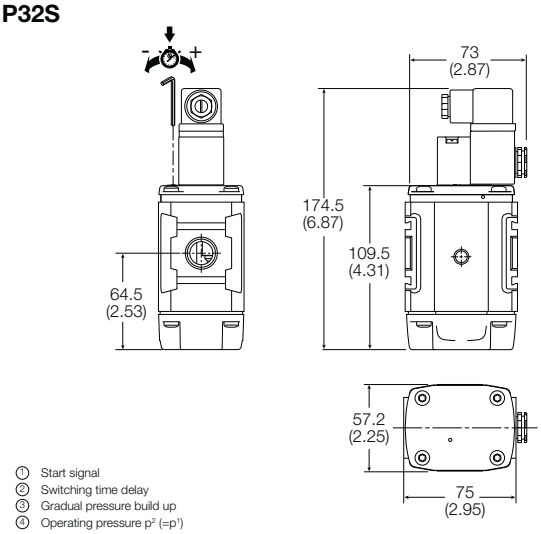

① Start signal
② Switching time delay
③ Gradual pressure build up
④ Operating pressure p^2 (=p^1)

Parker Hannifin Corporation
Pneumatic Division
Richland, Michigan
www.parker.com/pneumatics

Global Modular Solenoid Operators

Solenoid Operators - CNOMO

Technical data - Solenoid operators, coil combinations

	NC Normal Operator with 22 x 30 standard coil	NC Normal Operator with 30 x 30 standard coil
Working pressure	0 to 10 bar	0 to 10 bar
Ambient temperature	-10°C to 60°C *	-10°C to 60°C *
Power (DC)	4.8W	2.7W
Power (AC)	8.5VA	4.9VA
Voltage tolerance	+/-10%	+/-10%
Duty cycle	100%	100%
Insulation class	F	F
Electric connection	B Industrial	DIN 43650A
Protection	IP65	IP65
Approval		UL/CSA
Working media	All neutral media such as compressed air	

* Limited to 50°C if use with 100% duty cycle

Solenoid Coils with M12 Connection

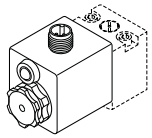

Voltage	Order code	Weight (Kg)
Direct current		
24VDC	**P2FC6449**	0.065

Transients

Interrupting the current through the solenoid coil produces momentary voltage peaks which, under unfavourable conditions, can amount to several hundred times the rated operating voltage. Normally, these transients do not cause problems, but to achieve the Maximum life of relays in the circuit (and particularly of transistors, thyristors and integrated circuits) it is desirable to provide protection by means of voltage-dependent resistors (varistors). All connectors/cable plugs EN175301-803 with LED's include this type of circuit protection.

Materials

Pilot Valve	
Body:	Polyamide
Armature tube:	Brass
Plunger & core:	Corrosion resistant Cr-Ni steel
Seals:	Fluorocarbon
Screws:	Stainless steel
Coil	
Encapsualtion material:	Thermoplastic as standard Duroplast for M12 connection

Spare Base Solenoid Pilot Operator CNOMO NC

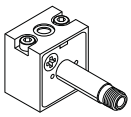

Description	Order code non-lock manual override	Weight (Kg)
Standard Duty	**P2FP23N4B**	0.065
No Override	**P2FP23N4A**	0.065

Note: Solenoid pilot operators are fitted to the Global range. Order the above part numbers for spares. The operators are supplied with mounting screws and interface 'O' rings. Coils and connectors must be ordered separately.

Solenoid Coils with DIN A or Industrial B Connection

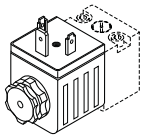

Voltage	22mm x 30mm Order code B industrial standard	Weight (Kg)	30mm x 30mm Order code DIN 43650A standard	Weight (Kg)
Direct current				
24VDC	**P2FCB449**	0.093	**P2FCA449**	0.105
Alternative current				
110V 50Hz, 120V 60Hz	**P2FCB453**	0.093	**P2FCA453**	0.105

☐ Most popular.

Parker Hannifin Corporation
Pneumatic Division
Richland, Michigan
www.parker.com/pneumatics

Solenoid Connectors / Cable Plugs EN175301-803

	Description	Order code 22mm Form B Industrial	Order code 30mm Form A DIN 43650A
With standard screw 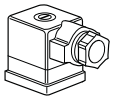	Standard IP65 without flying lead	**PS2429BP**	**PS2028BP**
	With LED and protection 24VAC/DC	**PS243079BP**	**PS203279BP**
	With LED and protection 110VAC	**PS243083BP**	**PS203283BP**
With cable 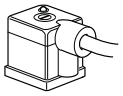	Standard with 2m cable IP65	**PS2429JBP**	**PS2028JCP**
	24VAC/DC, 2m cable LED and protection IP65	**PS2430J79BP**	**PS2032J79CP**
	110VAC/DC, 2m cable LED and protection IP65	**PS2430J83BP**	**PS2032J83CP**

Solenoid coil dimensions mm (inches)

22 x 30mm

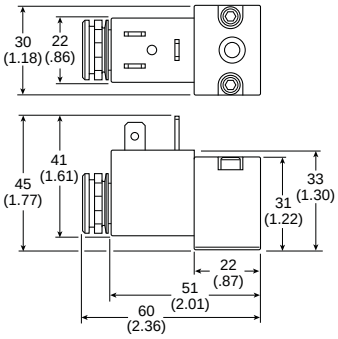

30 x 30mm

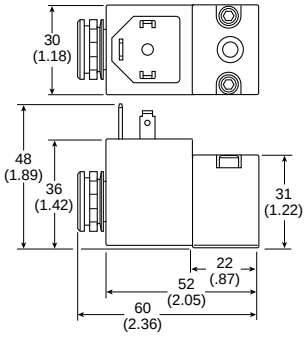

Electrical schematics

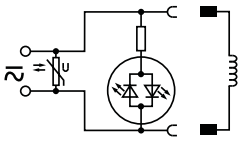

PS243079BP	**PS203279BP**
PS2430J79BP	**PS2032J79CP**
PS243083BP	**PS203283BP**
PS2430J83BP	**PS2032J83CP**
PS294679BP	**PS294683BP**
PS2946J79BP	**PS2946J83BP**

Cable plug dimensions mm (inches)

22mm Form B Industrial
Cable plugs

PS2429BP

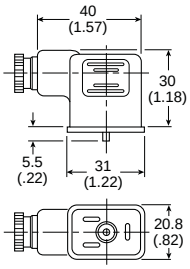

30mm DIN 43650A
Cable plugs

PS2028BP

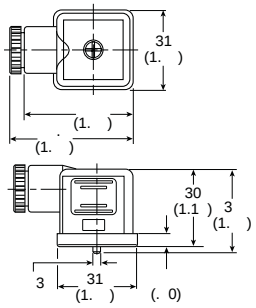

Most popular.

Parker Hannifin Corporation
Pneumatic Division
Richland, Michigan
www.parker.com/pneumatics

Global Modular Accessories

Safety Lockout Valves

	Model type	Port size	Thread type	Flow dm^3/s (SCFM)	Part number Flow from *left to right*	Part number Flow from *right to left*
	P31	1/4"	NPT	47.2 (100)	**P31VA92LSAN**	
	P32	1/4"	NPT	66.5 (141)	**P32VA92LSAN**	**P32VA92LSBN**
		3/8"	NPT	101.9 (216)	**P32VA93LSAN**	**P32VA93LSBN**
		1/2"	NPT	128.4 (272)	**P32VA94LSAN**	**P32VA94LSBN**
	P33	1/2"	NPT	136.9 (290)	**P33VA94LSAN**	**P33VA94LSBN**
		3/4"	NPT	141.6 (300)	**P33VA96LSAN**	**P33VA96LSBN**

For thread type: BSPP 1, BSPT 2, NPT 9

Modular Ball Valve

	Model type	Port size	Exhaust port	Thread type	Flow dm^3/s (SCFM)	Part number Flow from *left to right*
	P31	1/4"	1/4"	NPT	20 (42.4)	**P31VB92LBNN**
	P32	3/8"	1/4"	NPT	90 (190.7)	**P32VB93LBNN**
		1/2"	1/4"	NPT	122 (258.5)	**P32VB94LBNN**
	P33	1/2"	1/2"	NPT	265 (561.5)	**P33VB94LBNN**
		3/4"	1/2"	NPT	320 (678)	**P33VB96LBNN**

For thread type: BSPP 1, BSPT 2, NPT 9

Manifold Blocks

	Model type	In / Out port size	Auxiliary port size top	Auxiliary port size bottom	Thread type	Part number
	P31	1/4"	1/4"	1/4"	NPT	**P31MA92022N**
	P32	1/2"	1/4"	1/2"	NPT	**P32MA94024N**
	P33	3/4"	1/4"	1/2"	NPT	**P33MA96024N**

For thread type: BSPP 1, BSPT 2, NPT 9

Most popular.

Parker Hannifin Corporation
Pneumatic Division
Richland, Michigan
www.parker.com/pneumatics

P31 Series Accessories

	Description	Port size	Part number
	C-bracket (Fits to filter and lubricator body)	—	**P31KA00MW**
	T-bracket w/ body connector	—	**P31KA00MT**
	Body connector	—	**P31KA00CB**
	Port block kit	1/8 NPT	**P31KA91CP**
		1/4 NPT	**P31KA92CP**
		3/8 NPT	**P31KA93CP**
		1/8 BSPP	**P31KA11CP**
		1/4 BSPP	**P31KA12CP**
		3/8 BSPP	**P31KA13CP**
		1/8 BSPT	**P31KA21CP**
		1/4 BSPT	**P31KA22CP**
		3/8 BSPT	**P31KA23CP**
	Port block kit with T-bracket	1/8 NPT	**P31KA91CN**
		1/4 NPT	**P31KA92CN**
		3/8 NPT	**P31KA93CN**
		1/8 BSPP	**P31KA11CN**
		1/4 BSPP	**P31KA12CN**
		3/8 BSPP	**P31KA13CN**
		1/8 BSPT	**P31KA21CN**
		1/4 BSPT	**P31KA22CN**
		3/8 BSPT	**P31KA23CN**
	Angle bracket (Fits to regulator and filter / regulator body)	—	**P31KB00MR**

P32 Series Accessories

	Description	Part number
	Angle bracket (Fits to regulator and filter / regulator body)	**P32KB00MR**
	L-bracket (Fits to filter and lubricator body)	**P32KA00ML**

☐ Most popular.

P32 & P33 Series Accessories

	Description	Port size	Part number
	T-bracket with body connector	—	**P32KA00MT**
	Body connector	—	**P32KA00CB**
	Port block kit	1/4 NPT	**P32KA92CP**
		3/8 NPT	**P32KA93CP**
		1/2 NPT	**P32KA94CP**
		3/4 NPT	**P32KA96CP**
		1/4 BSPP	**P32KA12CP**
		3/8 BSPP	**P32KA13CP**
		1/2 BSPP	**P32KA14CP**
		3/4 BSPP	**P32KA16CP**
		1/4 BSPT	**P32KA22CP**
		3/8 BSPT	**P32KA23CP**
		1/2 BSPT	**P32KA24CP**
		3/4 BSPT	**P32KA26CP**
	T-bracket (fits to body connector or port block)	—	**P32KA00MB**

P33 Series Accessories

	Description	Part number
	Angle bracket (Fits to regulator and filter / regulator body)	**P33KA00MR**
	L-bracket (Fits to filter and lubricator body)	**P33KA00ML**

PPS1 Pressure Switch

Thread size	Part number
1/4 NPT	**PPS1-1C3-RHM**
1/8 NPT	**PPS1-2C3-RHM**
1/4" NPT	**PPS1-1C3-RWL**
1/8" NPT	**PPS1-2C3-RWL**

Parker Hannifin Corporation
Pneumatic Division
Richland, Michigan
www.parker.com/pneumatics

Service Kits

	Description		P31	P32	P33
	Panel mount (plastic)		**P31KA00MP**	**P32KA00MP**	**P33KA00MP**
	Panel mount nut (aluminum)		**P31KA00MM**	**P32KA00MM**	**P33KA00MM**
	5 element kit		**P31KA00ESE**	**P32KA00ESE**	**P33KA00ESE**
	1 element kit		**P31KA00ES9**	**P32KA00ES9**	**P33KA00ES9**
	0.01 element kit		**P31KA00ESC**	**P32KA00ESC**	**P33KA00ESC**
	Adsorber element kit		**P31KA00ESA**	**P32KA00ESA**	**P33KA00ESA**
	Auto drain kit			**P32KA00DA**	**P32KA00DA**
	Differential pressure indicator kit		**P31KA00RQ**		
				P32KA00RQ	**P32KA00RQ**
	Fill plug kit		**P31KA00PL**	**P32KA00PL**	**P32KA00PL**
	Drip control assembly kit		**P32KA00PG**	**P32KA00PG**	**P32KA00PG**
	Plastic bowl w/ bowl guard &	manual drain	**P31KA00BGM**	**P32KA00BGM**	**P33KA00BGM**
		pulse drain	**P31KA00BGB**		
		auto drain		**P32KA00BGA**	**P33KA00BGA**
	Lubricator	no drain	**P31KA00BGN**	**P32KA00BGN**	**P33KA00BGN**
	Metal bowl w/o sight gauge &	manual drain	**P31KA00BMM**	**P32KA00BMM**	**P33KA00BMM**
		pulse drain	**P31KA00BMB**		
		auto drain		**P32KA00BMA**	**P33KA00BMA**
	Lubricator	no drain	**P31KA00BMN**		
	Metal bowl w/ sight gauge &	manual drain		**P32KA00BSM**	**P33KA00BSM**
		auto drain		**P32KA00BSA**	**P33KA00BSA**
	Lubricator	no drain		**P32KA00BSN**	**P33KA00BSN**

Most popular.

Parker Hannifin Corporation
Pneumatic Division
Richland, Michigan
www.parker.com/pneumatics

Service Kits

	Port size	Description		P31	P32	P33
		Regulator - relieving repair kit		**P31KA00RB**	**P32KA00RB**	**P33KA00RB**
		Regulator - non relieving repair kit		**P31KA00RC**	**P32KA00RC**	**P33KA00RC**
		Regulator - main adjusting spring 0-2 bar (0-30 PSIG) kit		**P31KA00PR**	**P32KA00PR**	**P33KA00PR**
		Regulator - main adjusting spring 0-4.1 bar (0-60 PSIG) kit		**P31KA00PS**	**P32KA00PS**	**P33KA00PS**
		Regulator - main adjusting spring 0-8.6 bar (0-125 PSIG) kit		**P31KA00PT**	**P32KA00PT**	**P33KA00PT**
		Regulator - main adjusting spring 0-17 bar (0-250 PSIG) kit			**P32KA00PV**	**P33KA00PV**
		Square flush mount gauge kit	0-4 bar	**K4511SCR04B**		
			0-11 bar	**K4511SCR11B**		
			0-60 PSIG	**K4511SCR060**		
			0-160 PSIG	**K4511SCR160**		
	1/8"	1.00" round gauge	0-60 PSIG / 0-4.1 bar	**K4510N18060**		
	1/8"		0-160 PSIG / 0-10 bar	**K4510N18160**		
	1/8"	40mm round gauge	0-30 PSIG / 0-2 bar	**K4515N18030**		
	1/8"	(Not for use with common port regulators)	0-60 PSIG / 0-4.1 bar	**K4515N18060**		
	1/8"		0-160 PSIG / 0-10 bar	**K4515N18160**		
	1/4	50mm round gauge	0-30 PSIG / 0-2 bar		**K4520N14030**	**K4520N14030**
	1/4"		0-60 PSIG / 0-4.1 bar		**K4520N14060**	**K4520N14060**
	1/4"		0-160 PSIG / 0-10 bar		**K4520N14160**	**K4520N14160**
	1/4"		0-300 PSIG / 0-20 bar		**K4520N14300**	**K4520N14300**
	1/4"	44mm (1-3/4") digital round	0-160 PSIG / 0-11 bar / 0-1.1 MPa		**K4517N14160**	**K4517N14160**
		Body connector o-ring (spares kit) (pack of 10)		**P31KA00CY**	**P32KA00CY**	**P32KA00CY**
		Tamperproof knob kit		**P31KB00AT**	**P32KB00AT**	

Most popular.

Parker Hannifin Corporation
Pneumatic Division
Richland, Michigan
www.parker.com/pneumatics

Global FRL Flow Charts

Mini Particulate Filter - P31

1/4 Filter

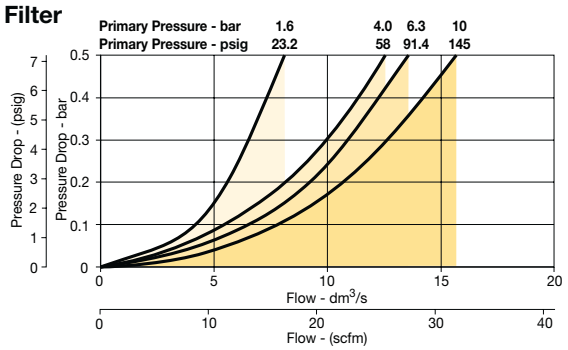

Compact Particulate Filter - P32

1/4 Filter

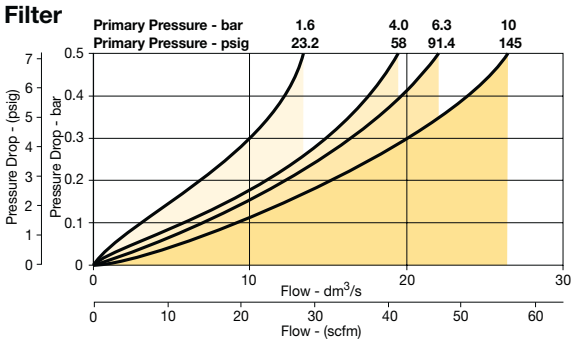

3/8 Filter

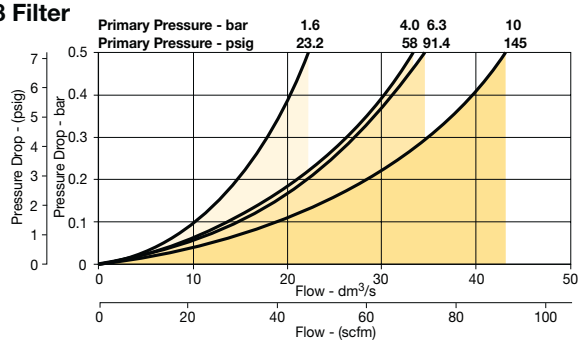

1/2 Filter

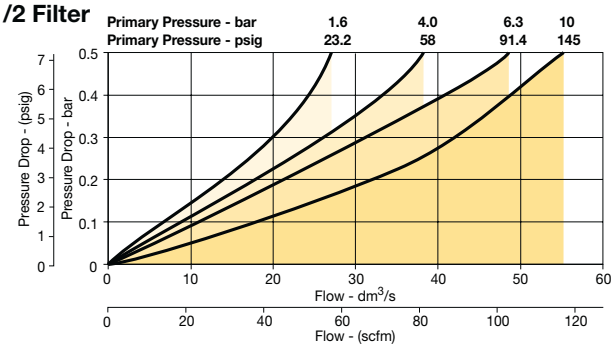

Standard Particulate Filter - P33

1/2 Filter

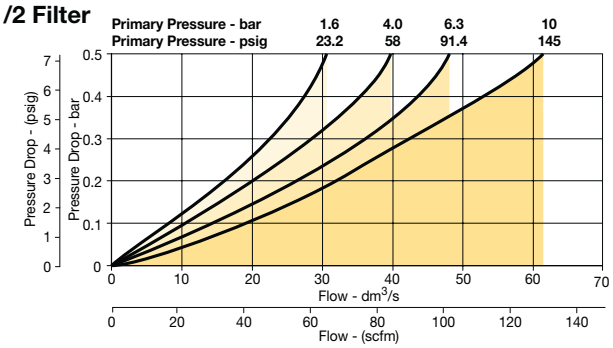

3/4 Filter

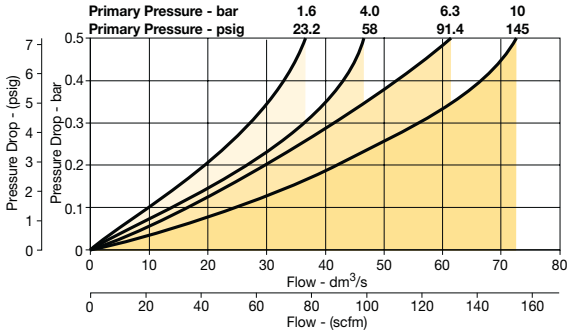

Parker Hannifin Corporation
Pneumatic Division
Richland, Michigan
www.parker.com/pneumatics

Mini Coalescing and Adsorber Filters - P31

P31 - 1.0 micron flow

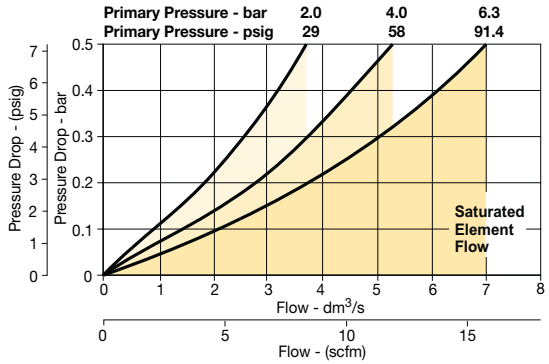

P31 - 0.01 micron flow

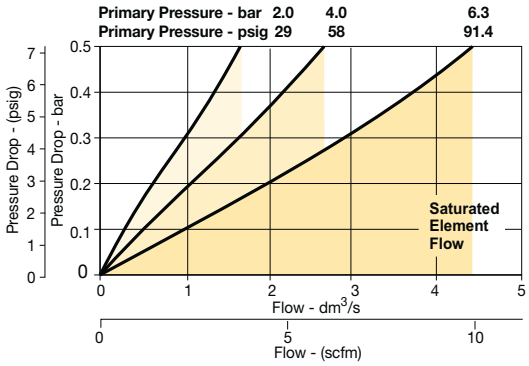

Compact Coalescing and Adsorber Filter - P32

P32 - 1.0 micron flow

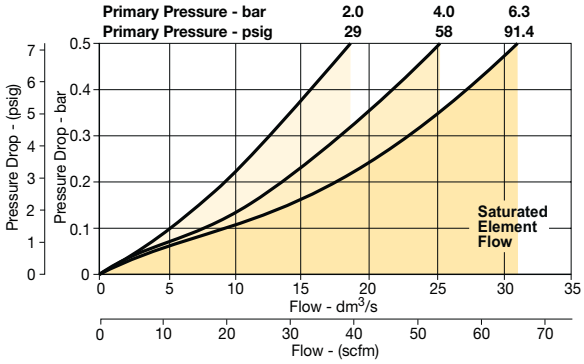

P32 - 0.01 micron flow

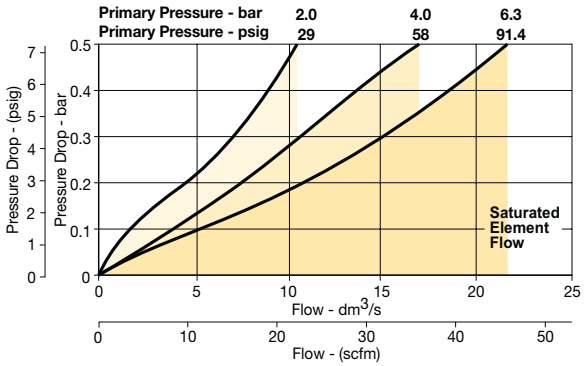

Standard Coalescing and Adsorber Filter - P33

P33 - 1.0 micron flow

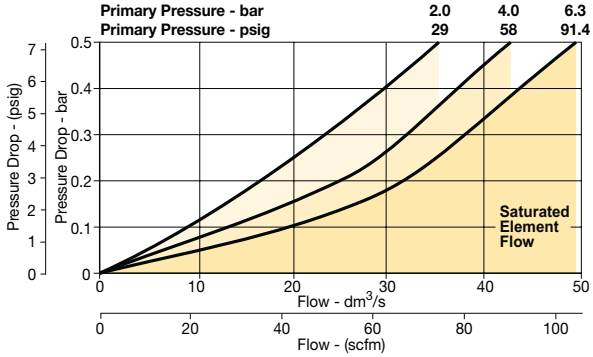

P33 - 0.01 micron flow

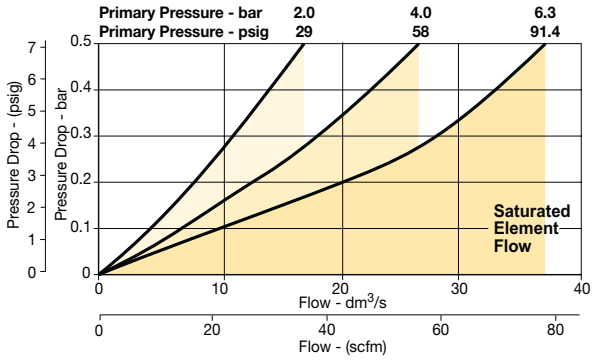

Parker Hannifin Corporation
Pneumatic Division
Richland, Michigan
www.parker.com/pneumatics

Mini Regulator - P31

1/4 Regulator

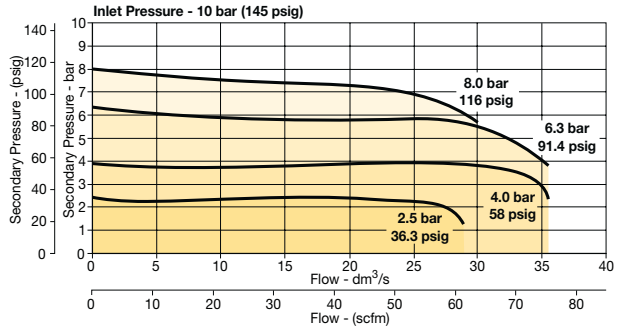

Compact Regulator - P32

1/2 Regulator

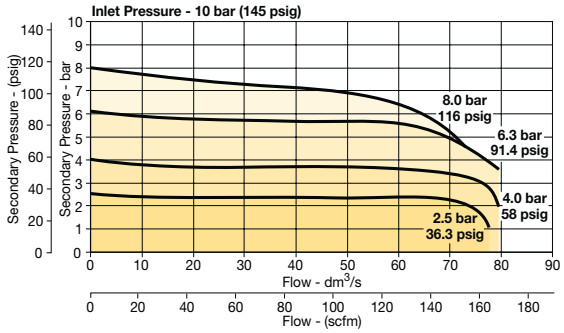

Mini Common - P1 Regulator - P31

1/4 Common Regulator

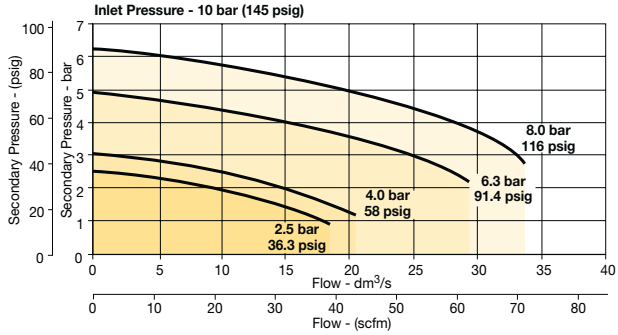

Compact Common - P1 Regulator - P32

1/4, 3/8 or 1/2 Common Regulator

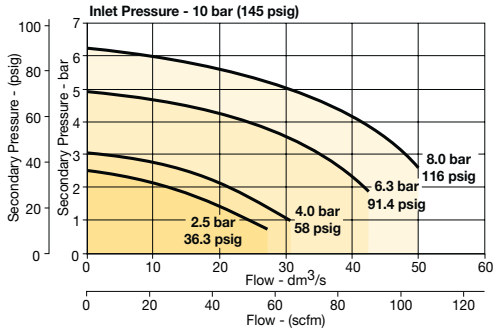

Compact Regulator - P32

1/4 Regulator

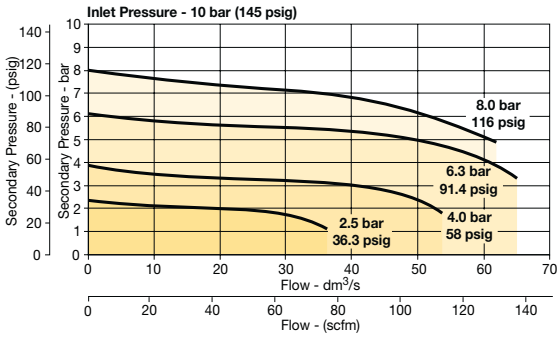

3/8 Regulator

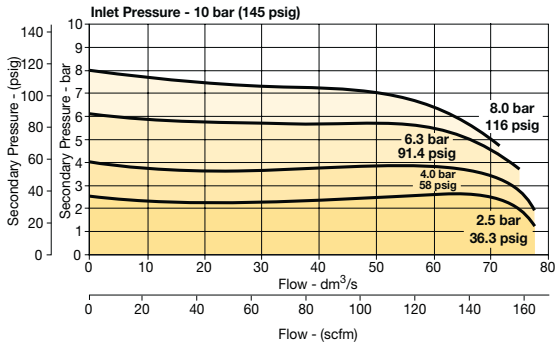

Standard Regulator - P33

1/2 Regulator

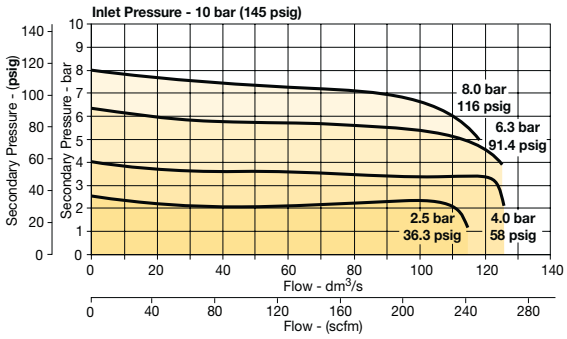

3/4 Regulator

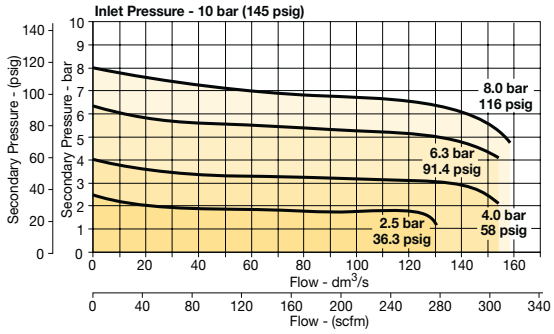

Parker Hannifin Corporation
Pneumatic Division
Richland, Michigan
www.parker.com/pneumatics

Mini Filter / Regulator - P31

1/4 Filter/Regulator

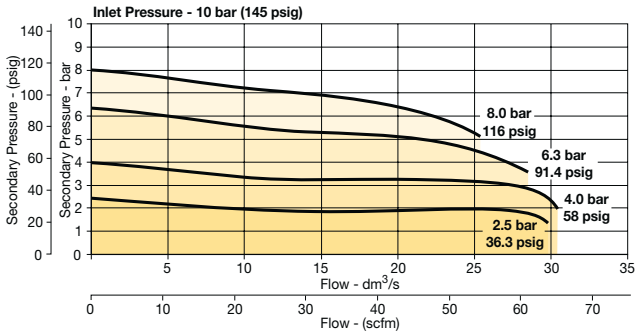

Compact Filter / Regulator - P32

1/4 Filter/Regulator

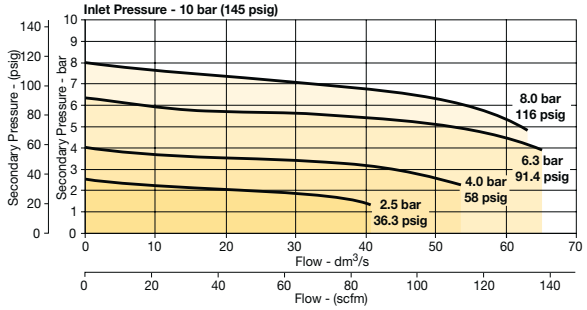

3/8 Filter/Regulator

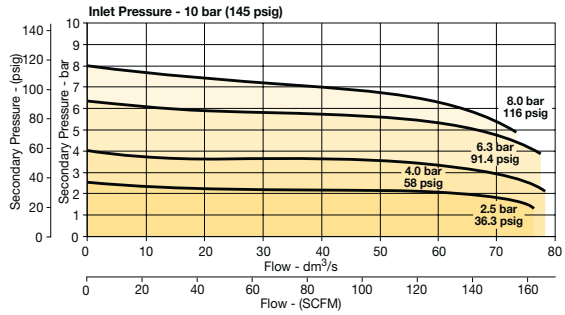

1/2 Filter/Regulator

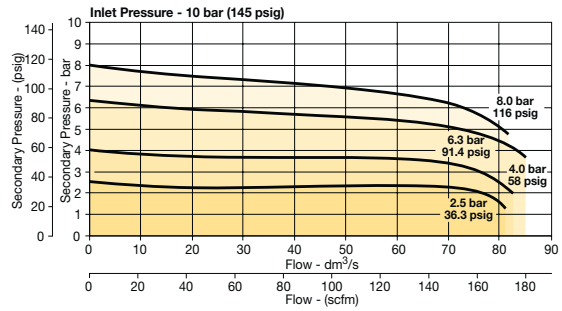

Standard Filter / Regulator - P33

1/2 Filter/Regulator

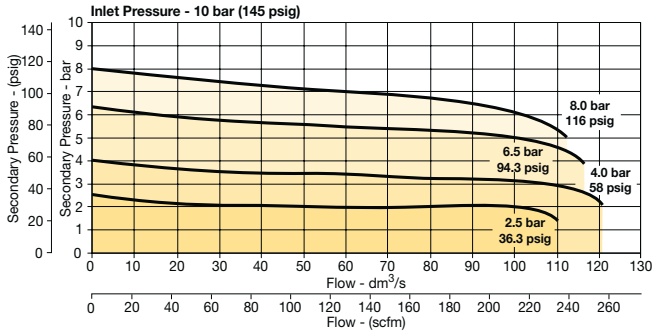

3/4 Filter/Regulator

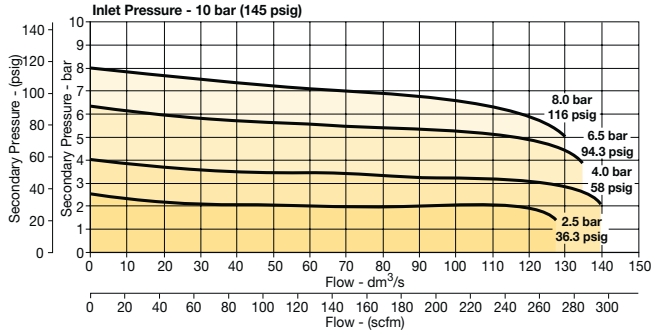

Parker Hannifin Corporation
Pneumatic Division
Richland, Michigan
www.parker.com/pneumatics

Mini Lubricator - P31

1/4 Lubricator

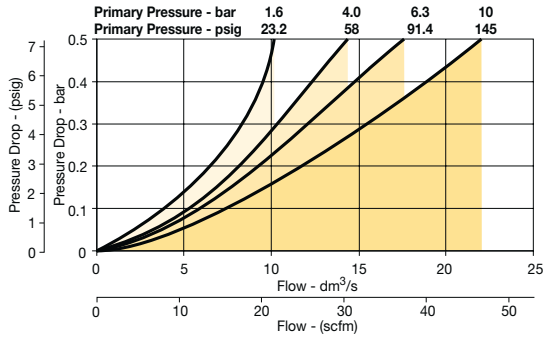

Compact Lubricator - P32

1/4 Lubricator

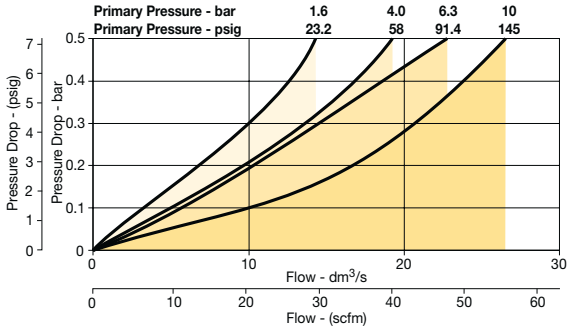

3/8 Lubricator

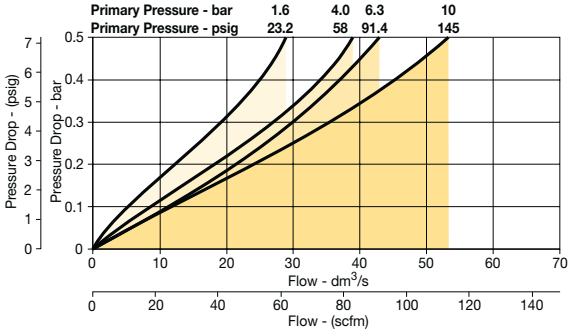

1/2 Lubricator

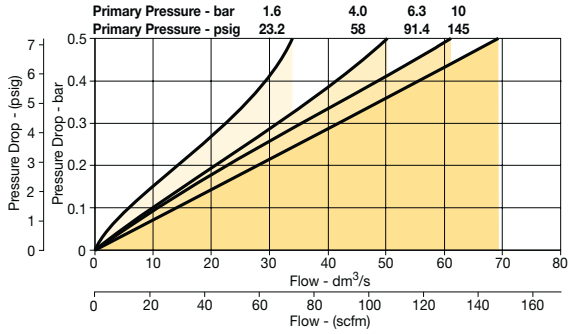

Standard Lubricator - P33

1/2 Lubricator

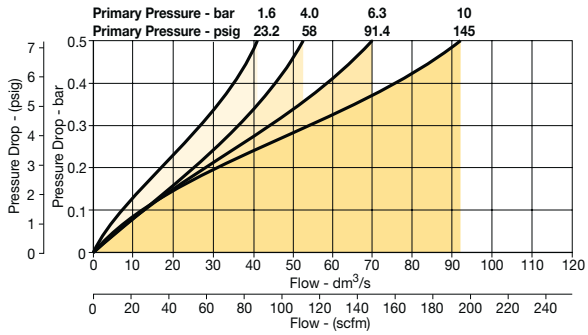

3/4 Lubricator

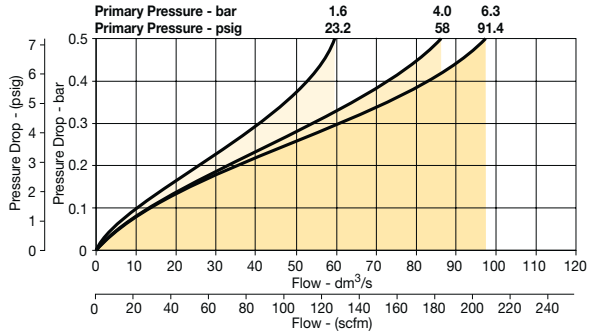

Parker Hannifin Corporation
Pneumatic Division
Richland, Michigan
www.parker.com/pneumatics

Proportional Regulators

P31P Regulator 1/4” Ports

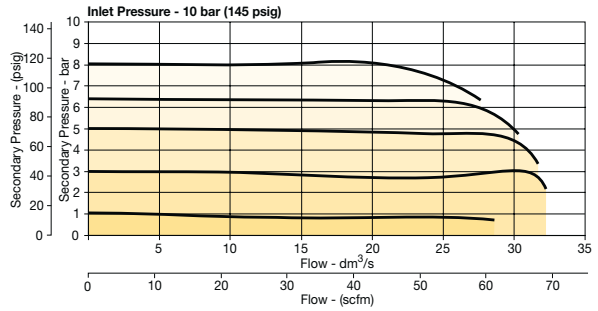

P32P Regulator 1/2” Ports

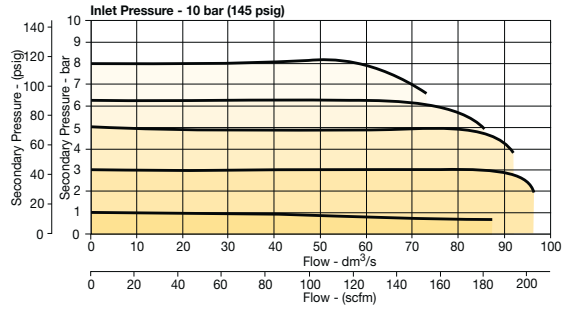

Combined Soft Start / Dump Valve

1/4 Soft Start & Dump Valve

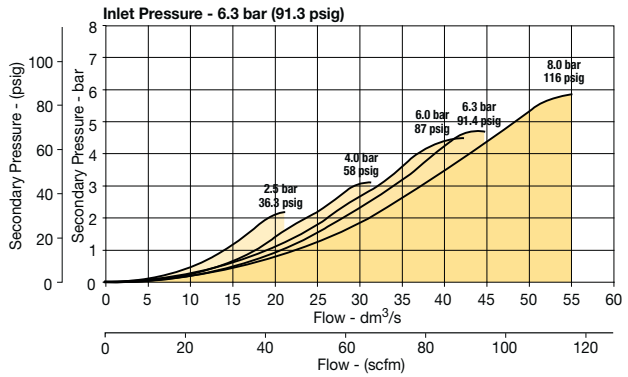

1/2 Soft Start & Dump Valve

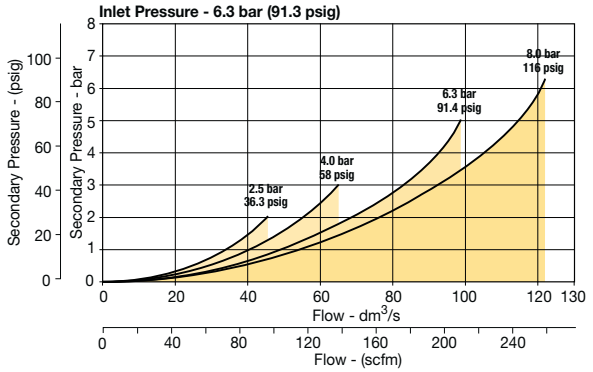

Dump Valve

1/4 Remote Dump Valve

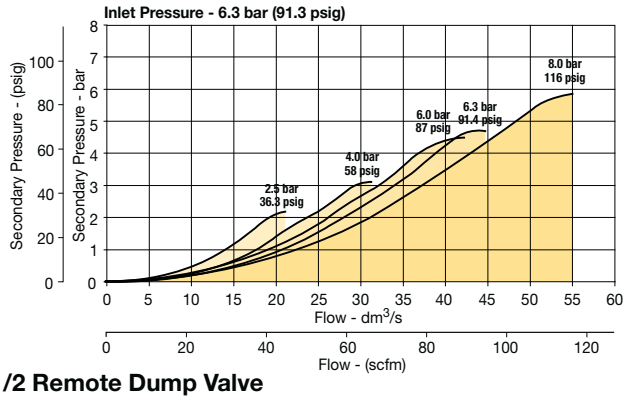

1/2 Remote Dump Valve

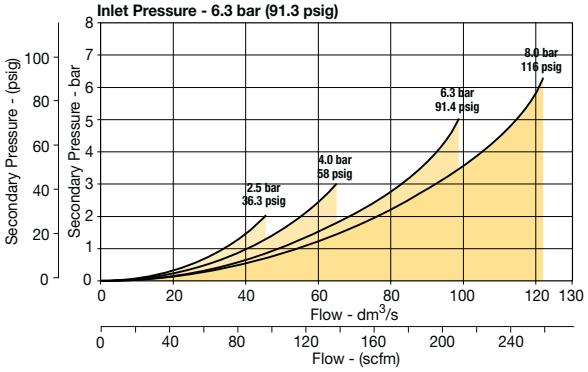

Soft Start Valve

1/4 Soft Start Valve

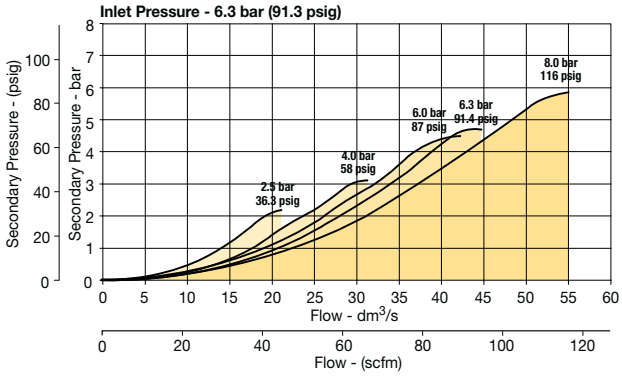

1/2 Soft Start Valve

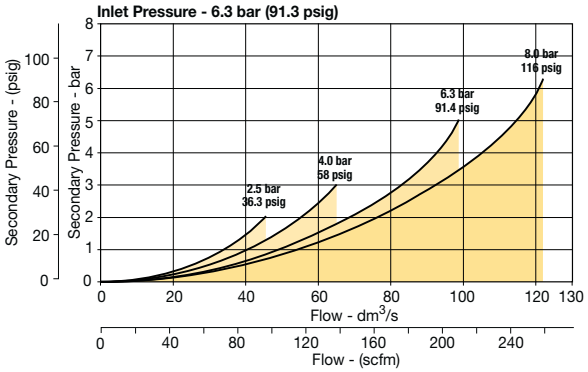

Parker Hannifin Corporation
Pneumatic Division
Richland, Michigan
www.parker.com/pneumatics

06F, 07F Prep-Air II Particulate Filters

- Excellent water removal efficiency
- Unique deflector plate and shroud creates a swirling of the air stream ensuring maximum water and dirt separation
- Large filter element surface guarantees low pressure drop and increased element life
- Optional automatic float drain available
- 06F: 1/4", 3/8" & 1/2" ports (NPT & BSPP)
- 07F: 1/2" & 3/4" ports (NPT & BSPP)

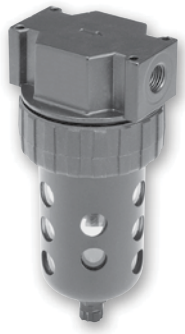

06F

07F

Material specifications

Body	Zinc
Bowls	Transparent polycarbonate or Metal (zinc) with or without sight gauge
Bowl guards	Steel
Collar	Plastic (06, 07) or metal (07)
Deflector, shroud & baffle	Plastic
Drain	Plastic
Automatic float drain –	
Housing, float	Plastic
Seals	Nitrile
Springs, push rod	Stainless steel
Filter elements –	
40 Micron (standard)	Plastic
5 Micron (optional)	Plastic
Seals	Nitrile
Sight gauge	Polyamide

Operating information

		06F & 07F
Operating pressure:	Poly bowl	0 to 150 PSIG (0 to 10.3 bar)
	Metal bowl	0 to 250 PSIG (0 to 17.2 bar)
Auto float drain:	Poly bowl	15 to 250 PSIG (1.0 to 17.2 bar)
	Metal bowl	
Operating temperature:	Poly bowl	32°F to 125°F (0°C to 52°C)
	Metal bowl	32°F to 175°F (0°C to 80°C)

06F, 07F Particulate Filters

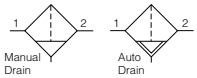

	Port size	Bowl type	Flow SCFM	Element type	Part number (NPT) Twist drain	Part number (NPT) Automatic float drain
06F	1/4"	Poly bowl / Metal guard	53	**40 micron**	**06F12AC**	**06F16AC**
	1/4"	Metal bowl / Sight gauge	53	**40 micron**	**06F14AC**	**06F18AC**
	3/8"	Poly bowl / Metal guard	80	**40 micron**	**06F22AC**	**06F26AC**
	3/8"	Metal bowl / Sight gauge	80	**40 micron**	**06F24AC**	**06F28AC**
	1/2"	Poly bowl / Metal guard	85	**40 micron**	**06F32AC**	**06F36AC**
	1/2"	Metal bowl / Sight gauge	85	**40 micron**	**06F34AC**	**06F38AC**
07F	1/2"	Poly bowl / Metal guard	75	**40 micron**	**07F32AC**	**07F36AC**
	1/2"	Metal bowl / Sight gauge	75	**40 micron**	**07F34AC**	**07F38AC**
	3/4"	Poly bowl / Metal guard	80	**40 micron**	**07F42AC**	**07F46AC**
	3/4"	Metal bowl / Sight gauge	80	**40 micron**	**07F44AC**	**07F48AC**

Most popular.

Parker Hannifin Corporation
Pneumatic Division
Richland, Michigan
www.parker.com/pneumatics

06F (Compact)

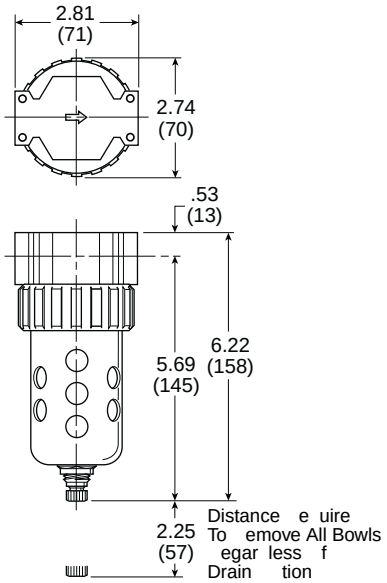

07F (Standard)

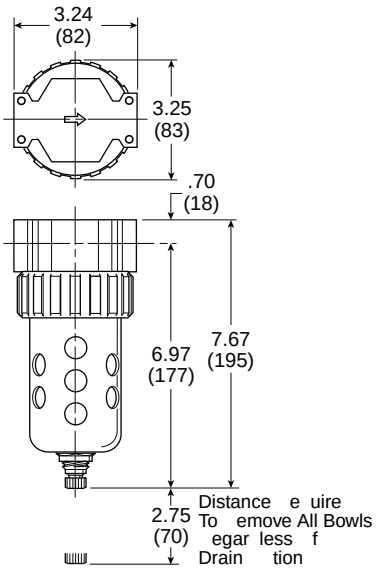

Service kits

Description		06F (Compact)	07F (Standard)
Bowl guard kit		**PS705P**	**PS805P**
Bowl Kits –			
Poly bowl –	Auto float drain	**PS722P**	**PS822P**
	Twist drain	**PS732P**	**PS832P**
Metal bowl –	Auto float drain	**PS726P**	**PS826P**
	Twist drain	**PS734P**	**PS834P**
	Sight gauge / automatic float drain	**PS723P**	**PS823P**
	Sight gauge / twist drain	**PS735P**	**PS835P**
DPI replacement kit		**PS781P**	**PS781P**
Drain kits –	Auto float drain	**PS506P**	**PS506P**
	Semi-auto drain	**PS511P**	**PS511P**
	Twist drain	**PS512P**	**PS512P**
	Push 'N' Drain	**PS513P**	**PS513P**
Filter element kit –	40 micron	**PS701P**	**PS801P**
	5 micron	**PS702P**	**PS802P**
	Adsorber	**PS731P**	**PS831P**
Mounting bracket kit		**PS743P**	**PS843P**
Sight gauge kit		**PS914P**	**PS914P**

Most popular.

Parker Hannifin Corporation
Pneumatic Division
Richland, Michigan
www.parker.com/pneumatics

11F, 12F Prep-Air II Coalescing Filters

- Removes liquid aerosols and sub-micron particles
- Liquids gravitate to the bottom of the element and will not re-enter the airstream
- Oil free air for critical applications, such as air gauging and pneumatic instrumentation and controls
- Interchangeable twist and automatic float drains
- Differential pressure indicator standard
- 11F: 1/4", 3/8" & 1/2" ports (NPT & BSPP)
- 12F: 1/2" & 3/4" ports (NPT & BSPP)

11F

12F

Material specifications

Body	Zinc
Bowls	Transparent polycarbonate or Metal (zinc) with or without sight gauge
Bowl guards	Steel
Collar	Plastic (06, 07) or metal (07)
Drain	Plastic
Automatic float drain –	
Housing, float	Plastic
Seals	Nitrile
Springs, push rod	Stainless steel
Filter element –	
Borosilicate & felt glass fibers 99.97% DOP efficiency Largest Aerosol Particle Passed (Grade 6)	0.01 Micron
Largest Solid Particle Passed (Grade 6)	0.30 Micron
Seals	Nitrile
Sight gauge	Polyamide

Operating information

		11F & 12F
Operating pressure:	Poly bowl	0 to 150 PSIG (0 to 10.3 bar)
	Metal bowl	0 to 250 PSIG (0 to 17.2 bar)
Auto float drain:	Poly bowl Metal bowl	15 to 250 PSIG (1.0 to 17.2 bar)
Operating temperature:	Poly bowl	32°F to 125°F (0°C to 52°C)
	Metal bowl	32°F to 175°F (0°C to 80°C)

Coalescing Filters

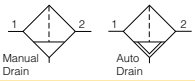

	Port size	Bowl type	Flow SCFM	Element type	Part number (NPT) Twist drain	Part number (NPT) Automatic float drain
11F	1/4"	Poly bowl / Metal guard	45	0.01 micron	**11F12EC**	**11F16EC**
	1/4"	Metal bowl / Sight gauge	60	1.0 micron	**11F14HC**	**11F18HC**
	1/4"	Metal bowl / Sight gauge	45	0.01 micron	**11F14EC**	**11F18EC**
	1/4"	Metal bowl / Sight gauge	60	1.0 micron	**11F14HC**	**11F18HC**
	3/8"	Poly bowl / Metal guard	48	0.01 micron	**11F22EC**	**11F26EC**
	3/8"	Poly bowl / Metal guard	72	1.0 micron	**11F22HC**	**11F26HC**
	3/8"	Metal bowl / Sight gauge	48	0.01 micron	**11F24EC**	**11F28EC**
	3/8"	Metal bowl / Sight gauge	72	1.0 micron	**11F24HC**	**11F28HC**
	1/2"	Poly bowl / Metal guard	65	0.01 micron	**11F32EC**	**11F36EC**
	1/2"	Poly bowl / Metal guard	95	1.0 micron	**11F32HC**	**11F36HC**
	1/2"	Metal bowl / Sight gauge	65	0.01 micron	**11F32EC**	**11F36EC**
	1/2"	Metal bowl / Sight gauge	95	1.0 micron	**11F34HC**	**11F38HC**
12F	1/2"	Poly bowl / Metal guard	75	0.01 micron	**12F32EC**	**12F36EC**
	1/2"	Poly bowl / Metal guard	125	1.0 micron	**12F32HC**	**12F36HC**
	1/2"	Metal bowl / Sight gauge	75	0.01 micron	**12F34EC**	**12F38EC**
	1/2"	Metal bowl / Sight gauge	125	1.0 micron	**12F34HC**	**12F38HC**
	3/4"	Poly bowl / Metal guard	80	0.01 micron	**12F42EC**	**12F46EC**
	3/4"	Poly bowl / Metal guard	160	1.0 micron	**12F42HC**	**12F46HC**
	3/4"	Metal bowl / Sight gauge	80	0.01 micron	**12F44EC**	**12F48EC**
	3/4"	Metal bowl / Sight gauge	160	1.0 micron	**12F44HC**	**12F48HC**

Most popular.

Parker Hannifin Corporation
Pneumatic Division
Richland, Michigan
www.parker.com/pneumatics

11F (Compact)

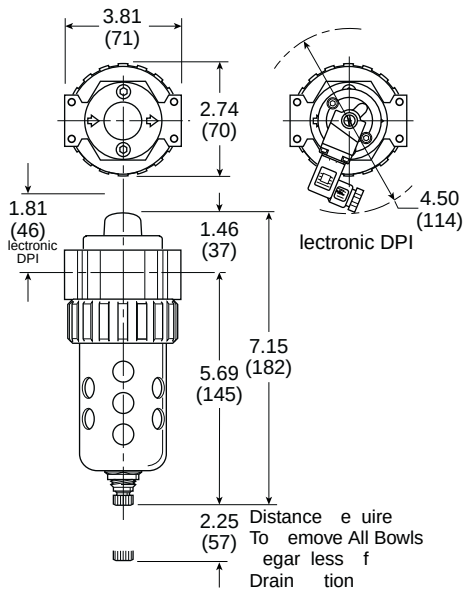

12F (Standard)

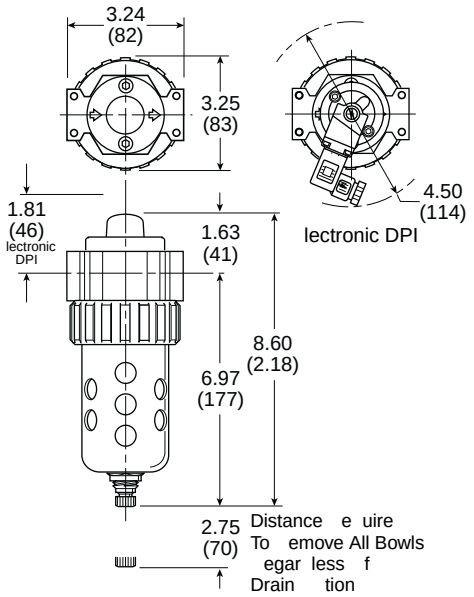

Service kits

Description		11F (Compact)	12F (Standard)
Bowl guard kit		**PS705P**	**PS805P**
Bowl Kits –			
Poly bowl –	Auto float drain	**PS722P**	**PS822P**
	Twist drain	**PS732P**	**PS832P**
Metal bowl –	Auto float drain	**PS726P**	**PS826P**
	Twist drain	**PS734P**	**PS834P**
	Sight gauge / automatic float drain	**PS723P**	**PS823P**
	Sight gauge / twist drain	**PS735P**	**PS835P**
DPI replacement kit		**PS781P**	**PS781P**
Drain kits –	Auto float drain	**PS506P**	**PS506P**
	Semi-auto drain	**PS511P**	**PS511P**
	Twist drain	**PS512P**	**PS512P**
	Push 'N' Drain	**PS513P**	**PS513P**
Electronic DPI replacement kit		**PS764**	**PS764**
Electrical connector -	15mm, 3-pin DIN, 6 Ft. Cord	**PS2932JBP**	**PS2932JBP**
Filter element kit –	Grade 6 (Standard)	**PS701P**	**PS824P**
	Grade 10 (Optional)	**PS702P**	**PS830P**
Mounting bracket kit		**PS743P**	**PS843P**
Sight gauge kit		**PS914P**	**PS914P**

Most popular.

Parker Hannifin Corporation
Pneumatic Division
Richland, Michigan
www.parker.com/pneumatics

06R, 07R Prep-Air II Regulators

- Secondary aspiration plus balanced poppet provides quick response and accurate pressure regulation
- Rolling diaphragm for extended life
- Two high flow 1/4" gauge ports can be used as additional outlets
- Easily serviced
- Removable non-rising knob for panel mounting and tamper resistance
- 06R: 1/4", 3/8" & 1/2" ports (NPT & BSPP)
- 07R: 1/2" & 3/4" ports (NPT & BSPP)

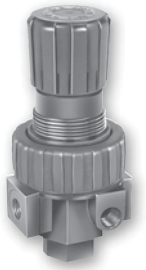
06R

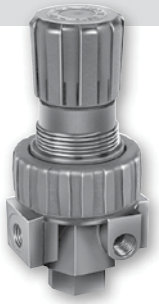
07R

Material specifications

Adjusting Stem	Steel
Body	Zinc
Bonnet, piston stem, valve poppet & cap	Plastic
Collar, knob	Plastic
Diaphragm	Nitrile
Seals	Nitrile
Springs – Poppet Control	Stainless Steel

Operating information

	06R (Compact), 07R (Standard)
Pressure rating:	250 PSIG (17.2 bar)
Temperature rating:	32°F to 175°F (0°C to 80°C)
Secondary pressure ranges –	
Standard pressure	2 to 125 PSIG (0 to 8.6 bar)
Medium pressure	1 to 60 PSIG (0 to 4.1 bar)
High pressure	5 to 250 PSIG (0.4 to 17.2 bar)

Regulators

		Port size	Pressure range	Flow SCFM	Part number (NPT) Without gauge	Part number (NPT) With 160 PSI gauge
06R		1/4"	125 PSIG	53	**06R113AC**	**06R118AC**
		3/8"	125 PSIG	60	**06R213AC**	**06R218AC**
		1/2"	125 PSIG	75	**06R313AC**	**06R318AC**
07R		1/2"	125 PSIG	90	**07R313AC**	**07R318AC**
		3/4"	125 PSIG	90	**07R413AC**	**07R418AC**

⚠ WARNING
Product rupture can cause serious injury.
Do not connect regulator to bottled gas.
Do not exceed maximum primary pressure rating.

CAUTION:
REGULATOR PRESSURE ADJUSTMENT –
The working range of knob adjustment is designed to permit outlet pressures within their full range. Pressure adjustment beyond this range is also possible because the knob is not a limiting device. This is a common characteristic of most industrial regulators, and limiting devices may be obtained only by special design. For best performance, regulated pressure should always be set by increasing the pressure up to the desired setting.

☐ Most popular.

Parker Hannifin Corporation
Pneumatic Division
Richland, Michigan
www.parker.com/pneumatics

06R (Compact)

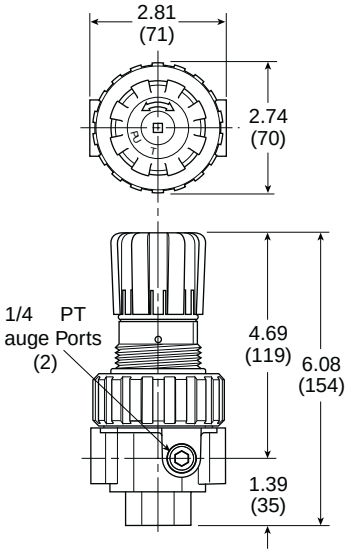

07R (Standard)

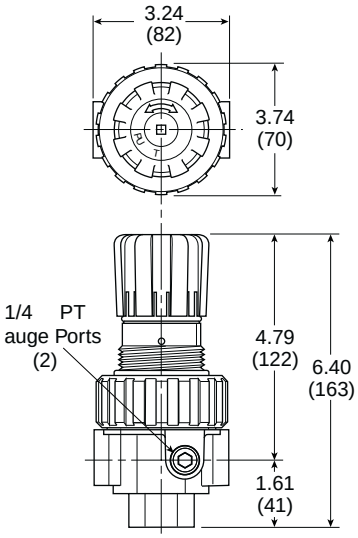

Service kits

Description			06R (Compact)	07R (Standard)
Bonnet assembly			**PS715P**	**PS715P**
Control knob			**P04069B**	**P04069B**
Gauges –	50mm (2") round 1/4" center back mount	60 PSIG (0 to 4.1 bar)	**K4520N14060**	**K4520N14060**
		160 PSIG (0 to 11.0 bar)	**K4520N14160**	**K4520N14160**
		300 PSIG (0 to 20.0 bar)	**K4520N14300**	**K4520N14300**
	44mm (1-3/4") digital round 1/4" center back mount	0-160 PSIG / 0-11 bar / 0-1.1 MPa	**K4517N14160**	**K4517N14160**
Mounting bracket kit (Includes panel mount nut)			**PS707P**	**PS807P**
Panel mount nut –		Plastic	**P04082**	**P04079B**
		Metal	**P04082**	**P04079B**
Reverse Flow Service Conversion Kit – Relieving			**PS708RP**	**PS808RP**
Springs –		1-30 PSIG range	**P01698**	**P01698**
		1-60 PSIG range	**P04062**	**P04062**
		2-125 PSIG range	**P04063**	**P04063**
		5-250 PSIG range	**P04064**	**P04064**
Tamperproof kit			**PS737P**	**PS7373P**

Most popular.

Parker Hannifin Corporation
Pneumatic Division
Richland, Michigan
www.parker.com/pneumatics

11R, 12R Prep-Air II Pilot Operated Regulators

- Balanced poppet provides quick response and accurate pressure regulation
- Pilot controlled regulators can be mounted "out of reach" with pilot regulator installed in a convenient location
- Solid control piston for extended life

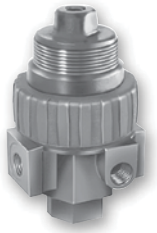

11R

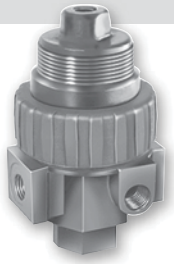

12R

Operating information

	11R	12R
Pressure rating:	0 to 250 PSIG (0 to 17.2 bar)	0 to 250 PSIG (0 to 17.2 bar)
Temperature rating:	32°F to 175°F (0°C to 80°C)	32°F to 175°F (0°C to 80°C)
Flow capacity SCFM:	1/4": 85 3/8": 95 1/2": 95	1/2": 140 3/4": 140

11R, 12R Pilot Controlled Regulators

Port size	Gauge	Part number (NPT), relieving 11R	12R
1/4"	No	**11R115PC**	
3/8"	No	**11R215PC**	
1/2"	No	**11R315PC**	**12R315PB**
3/4"	No		**12R415PB**
1/4"	160 PSI	**11R121PC**	
3/8"	160 PSI	**11R221PC**	
1/2"	160 PSI	**11R321PC**	**12R321PB**
3/4"	160 PSI		**12R421PB**

Material specifications

	11R	12R
Body	Zinc	Zinc
Bottom plug	–	–
Innervalve	–	–
Pilot cap	Zinc	Zinc
Piston & poppet	Plastic	Plastic
Seals	Nitrile	Nitrile
Springs – poppet	Steel	Steel

⚠ WARNING
Product rupture can cause serious injury.
Do not connect regulator to bottled gas.
Do not exceed maximum primary pressure rating.

CAUTION:
REGULATOR PRESSURE ADJUSTMENT –
The working range of knob adjustment is designed to permit outlet pressures within their full range. Pressure adjustment beyond this range is also possible because the knob is not a limiting device. This is a common characteristic of most industrial regulators, and limiting devices may be obtained only by special design. For best performance, regulated pressure should always be set by increasing the pressure up to the desired setting.

Most popular.

Parker Hannifin Corporation
Pneumatic Division
Richland, Michigan
www.parker.com/pneumatics

11R

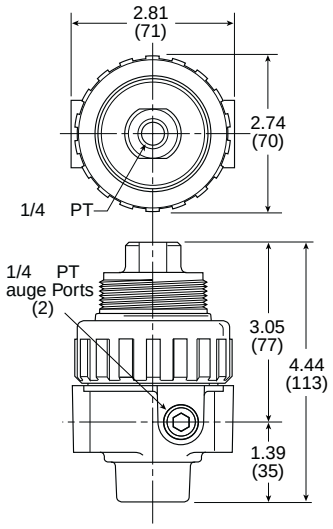

12R

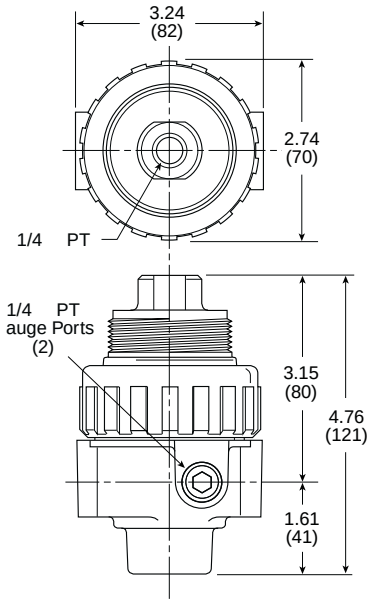

Service kits

		11R	12R
Body service kit		**PS713P**	**PS813P**
Gauges – 50mm (2") round 1/4" center back mount	60 PSIG (0 to 4.1 bar)	**K4520N14060**	**K4520N14060**
	160 PSIG (0 to 11.0 bar)	**K4520N14160**	**K4520N14160**
	300 PSIG (0 to 20.0 bar)	**K4520N14300**	**K4520N14300**
44mm (1-3/4") digital round 1/4" center back mount	0-160 PSIG / 0-11 bar / 0-1.1 MPa	**K4517N14160**	**K4517N14160**
Mounting bracket kit		**PS707P**	**PS807P**
Panel mount nut –	Metal	**P04079B**	**P04079B**
	Plastic	**P04082**	**P04082**
Pilot conversion kit		**PS745P**	**PS745P**
Repair kits –	Non-relieving	**PS747P**	**PS847P**
	Relieving	**PS749P**	**PS849P**

Parker Hannifin Corporation
Pneumatic Division
Richland, Michigan
www.parker.com/pneumatics

06E Prep-Air II Filter / Regulators

- Space saving package offers both filter and regulator features for optimal performance
- Excellent water removal efficiency
- Rolling diaphragm for extended life
- Quick response, and accurate pressure regulation regardless of changing flow or inlet pressure
- Two high flow 1/4" gauge ports can be used as additional outlets

Material specifications

Adjusting stem			Steel
Body			Zinc
Bonnet, internal parts			Plastic
Bowls		Transparent	Polycarbonate
		Metal	Zinc
Bowl guard			Steel
Collar			Plastic
Diaphragm			Nitrile
Drains	Manual twist drain standard	Body & nut	Plastic
	Automatic float drain optional	Float housing	Plastic
		Seals	Nitrile
		Springs, push rod	Stainless steel
Filter elements		40 Micron (standard)	Plastic
		5 Micron (optional)	Plastic
Knob			Plastic
Seals			Nitrile
Sight gauge			Polyamide
Springs –		Poppet	Stainless
		Control	Steel

Operating information

Pressure rating –	
Polycarbonate bowl	0 to 150 PSIG (0 to 10.4 bar)
Metal bowl	0 to 250 PSIG (0 to 17.2 bar)
Automatic float drain	15 to 250 PSIG (1.0 to 17.2 bar)
Temperature rating –	
Polycarbonate bowl	32°F to 125°F (0°C to 52°C)
Metal bowl	32°F to 175°F (0°C to 80°C)
Secondary pressure ranges –	
Standard pressure	2 to 125 PSIG (0 to 8.6 bar)
Medium pressure	1 to 60 PSIG (0 to 4.1 bar)
High pressure	5 to 250 PSIG (0.4 to 17.2 bar)

06E Compact Filter / Regulators

	Port size	Bowl type	Drain type	Flow SCFM	Element type	Part number (NPT) Pressure range (Without gauge) 60 PSIG	125 PSIG
06E	1/4"	Poly / Metal guard	Twist	46	40 micron	**06E12A11AC**	**06E12A13AC**
	1/4"	Poly / Metal guard	Auto float	46	40 micron	**06E16A11AC**	**06E16A13AC**
	3/8"	Poly / Metal guard	Twist	55	40 micron	**06E22A11AC**	**06E22A13AC**
	3/8"	Poly / Metal guard	Auto float	55	40 micron	**06E26A11AC**	**06E26A13AC**
	1/2"	Poly / Metal guard	Twist	61	40 micron	**06E32A11AC**	**06E32A13AC**
	1/2"	Poly / Metal guard	Auto float	61	40 micron	**06E36A11AC**	**06E36A13AC**
	1/4"	Metal / Sight gauge	Twist	46	40 micron	**06E14A11AC**	**06E14A13AC**
	1/4"	Metal / Sight gauge	Auto float	46	40 micron	**06E18A11AC**	**06E18A13AC**
	3/8"	Metal / Sight gauge	Twist	55	40 micron	**06E24A11AC**	**06E24A13AC**
	3/8"	Metal / Sight gauge	Auto float	55	40 micron	**06E28A11AC**	**06E28A13AC**
	1/2"	Metal / Sight gauge	Twist	61	40 micron	**06E34A11AC**	**06E34A13AC**
	1/2"	Metal / Sight gauge	Auto float	61	40 micron	**06E38A11AC**	**06E38A13AC**

⚠ WARNING
Product rupture can cause serious injury.
Do not connect regulator to bottled gas.
Do not exceed maximum primary pressure rating.

CAUTION:
REGULATOR PRESSURE ADJUSTMENT –
The working range of knob adjustment is designed to permit outlet pressures within their full range. Pressure adjustment beyond this range is also possible because the knob is not a limiting device. This is a common characteristic of most industrial regulators, and limiting devices may be obtained only by special design. For best performance, regulated pressure should always be set by increasing the pressure up to the desired setting.

Most popular.

Parker Hannifin Corporation
Pneumatic Division
Richland, Michigan
www.parker.com/pneumatics

06E

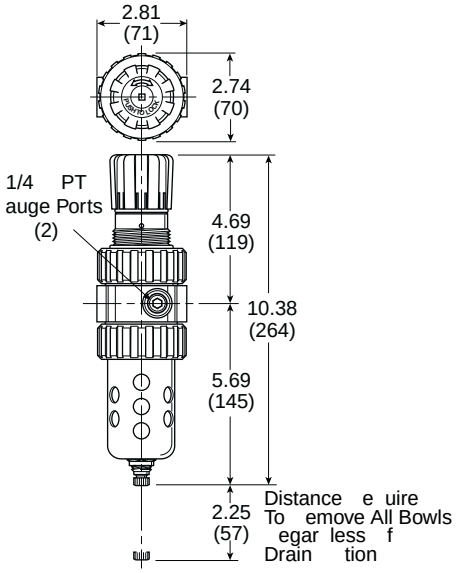

Service kits

Description			06E
Bonnet assembly kit			**PS715P**
Bowl guard kit			**PS705P**
Bowl kits	Poly bowl –	Automatic float drain	**PS722P**
		Twist drain	**PS732P**
	Metal bowl –	Automatic float drain	**PS726P**
		Semi-auto drain	**PS794P**
		Twist drain	**PS734P**
		Sight gauge / Automatic drain	**PS723P**
		Sight gauge / Twist drain	**PS735P**
Control knob			**P04069B**
Drain kits –		Automatic float drain	**PS506P**
		Semi-auto drain	**PS511P**
		Twist drain	**PS512P**
		Push 'N' Drain	**PS513P**
Filter element kits –		40 Micron	**PS701P**
		5 Micron	**PS702P**
		Adsorber	**PS731P**
Gauges –	50mm (2") round 1/4" center back mount	60 PSIG (0 to 4.1 bar)	**K4520N14060**
		160 PSIG (0 to 11.0 bar)	**K4520N14160**
		300 PSIG (0 to 20.0 bar)	**K4520N14300**
	44mm (1-3/4") digital round 1/4" center back mount	0-160 PSIG / 0-11 bar / 0-1.1 MPa	**K4517N14160**
Mounting bracket kit (includes panel mount nut)			**PS707P**
Panel mount nut			**P04082**
Service kits –		Non-relieving (includes poppet)	**PS711P**
		Relieving (includes poppet	**PS710P**
Seat insert kit			**PS713P**
Springs –		1- 30 PSIG range	**P01698**
		1- 60 PSIG range	**P04062**
		2- 125 PSIG range	**P04063**
		5- 250 PSIG range	**P04064**
Tamperproof kit (key lock)			**PS737P**

☐ Most popular.

Parker Hannifin Corporation
Pneumatic Division
Richland, Michigan
www.parker.com/pneumatics

07E Prep-Air II Filter / Regulators

- Space saving package offers both filter and regulator features for optimal performance
- Excellent water removal efficiency
- Rolling diaphragm for extended life
- Quick response, and accurate pressure regulation regardless of changing flow or inlet pressure
- Two high flow 1/4" gauge ports can be used as additional outlets

Material specifications

Adjusting stem			Steel
Body			Zinc
Bonnet, internal parts			Plastic
Bowls		Transparent	Polycarbonate
		Metal	Zinc
Bowl guard			Steel
Collar			Plastic or metal
Diaphragm			Nitrile
Drains	Manual twist drain standard	Body & nut	Plastic
	Automatic float drain optional	Float housing	Plastic
		Seals	Nitrile
		Springs, push rod	Stainless steel
Filter elements		40 Micron (standard)	Plastic
		5 Micron (optional)	Plastic
Knob			Plastic
Seals			Nitrile
Sight gauge			Polyamide
Springs –		Poppet	Stainless
		Control	Steel

Operating information

Pressure rating –	
Polycarbonate bowl	0 to 150 PSIG (0 to 10.4 bar)
Metal bowl	0 to 250 PSIG (0 to 17.2 bar)
Automatic float drain	15 to 250 PSIG (1.0 to 17.2 bar)
Temperature rating –	
Polycarbonate bowl	32°F to 125°F (0°C to 52°C)
Metal bowl	32°F to 175°F (0°C to 80°C)
Secondary pressure ranges –	
Standard pressure	2 to 125 PSIG (0 to 8.6 bar)
Medium pressure	1 to 60 PSIG (0 to 4.1 bar)
High pressure	5 to 250 PSIG (0.4 to 17.2 bar)

07E Standard Filter / Regulators

	Port size	Bowl type	Drain type	Flow SCFM	Element type	Part number (NPT) Pressure range (Without gauge) 60 PSIG	125 PSIG
07E	1/2"	Poly / Metal guard	Twist	90	40 micron	**07E32A11AC**	**07E32A13AC**
	1/2"	Poly / Metal guard	Auto float	90	40 micron	**07E36A11AC**	**07E36A13AC**
	3/4"	Poly / Metal guard	Twist	90	40 micron	**07E42A11AC**	**07E42A13AC**
	3/4"	Poly / Metal guard	Auto float	90	40 micron	**07E46A11AC**	**07E46A13AC**
	1/2"	Metal / Sight gauge	Twist	90	40 micron	**07E34A11AC**	**07E34A13AC**
	1/2"	Metal / Sight gauge	Auto float	90	40 micron	**07E38A11AC**	**07E38A13AC**
	3/4"	Metal / Sight gauge	Twist	90	40 micron	**07E44A11AC**	**07E44A13AC**
	3/4"	Metal / Sight gauge	Auto float	90	40 micron	**07E48A11AC**	**07E48A13AC**

⚠ WARNING
Product rupture can cause serious injury.
Do not connect regulator to bottled gas.
Do not exceed maximum primary pressure rating.

CAUTION:
REGULATOR PRESSURE ADJUSTMENT –
The working range of knob adjustment is designed to permit outlet pressures within their full range. Pressure adjustment beyond this range is also possible because the knob is not a limiting device. This is a common characteristic of most industrial regulators, and limiting devices may be obtained only by special design. For best performance, regulated pressure should always be set by increasing the pressure up to the desired setting.

Most popular.

Parker Hannifin Corporation
Pneumatic Division
Richland, Michigan
www.parker.com/pneumatics

07E

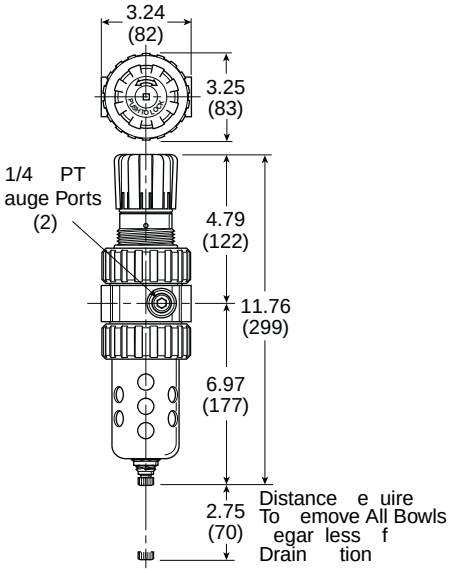

Service kits

Description			07E
Bonnet assembly kit			**PS715P**
Bowl guard kit			**PS805P**
Bowl kits –	Poly bowl –	Automatic float drain	**PS822P**
		Twist drain	**PS832P**
	Metal bowl –	Automatic float drain	**PS826P**
		Semi-auto drain	**PS894P**
		Twist drain	**PS834P**
		Sight gauge / Automatic drain	**PS823P**
		Sight gauge / Twist drain	**PS835P**
Control knob			**P04069B**
Drain kits –		Automatic float drain	**PS506P**
		Semi-auto drain	**PS511P**
		Twist drain	**PS512P**
		Push 'N' Drain	**PS513P**
Filter element kits –		40 Micron	**PS801P**
		5 Micron	**PS802P**
		Adsorber	**PS831P**
Gauges –	50mm (2") round 1/4" center back mount	60 PSIG (0 to 4.1 bar)	**K4520N14060**
		160 PSIG (0 to 11.0 bar)	**K4520N14160**
		300 PSIG (0 to 20.0 bar)	**K4520N14300**
	44mm (1-3/4") digital round 1/4" center back mount	0-160 PSIG / 0-11 bar / 0-1.1 MPa	**K4517N14160**
Mounting bracket kit (includes panel mount nut)			**PS807P**
Panel mount nut			**P04082**
Service kits –		Non-relieving (includes poppet)	**PS811P**
		Relieving (includes poppet	**PS810P**
Seat insert kit			**PS813P**
Springs –		1- 30 PSIG range	**P01698**
		1- 60 PSIG range	**P04062**
		2- 125 PSIG range	**P04063**
		5- 250 PSIG range	**P04064**
Tamperproof kit (key lock)			**PS737P**

Most popular.

Parker Hannifin Corporation
Pneumatic Division
Richland, Michigan
www.parker.com/pneumatics

16L, 17L Prep-Air II Micro-Mist Lubricators

- Proportional oil delivery over a wide range of air flows
- Generates oil particles of 5 micron or smaller downstream to lubricate systems having complex piping arrangements
- Precision needle valve assures repeatable oil delivery and provides simple adjustment of delivery rate
- Ideal for low and high flow applications with changing air flow
- Transparent sight dome for 360° visibility
- Yellow fill cap identifies Micro-Mist Lubricator
- 16L: 1/4", 3/8" & 1/2" ports (NPT & BSPP)
- 17L: 1/2" & 3/4" ports (NPT & BSPP)

16L

17L

Material specifications

Body	Zinc
Bowls –	
Transparent	Polycarbonate
Metal	Zinc
Bowl guards	Steel
Collar	Plastic (16, 17) or metal (17)
Drains, twist / body & nut	Plastic
Injector meter block & base assembly	Plastic
Seals	Nitrile
Sight dome	Polycarbonate
Sight gauge	Polyamide (Nylon)

Operating information

Pressure rating –	
Polycarbonate bowl	0 to 150 PSIG (0 to 10.4 bar)
Metal bowl	0 to 250 PSIG (0 to 17.2 bar)
Temperature rating –	
Polycarbonate bowl	32°F to 125°F (0°C to 52°C)
Metal bowl	32°F to 175°F (0°C to 80°C)
Minimum flow for lubrication:	1 SCFM at 100 PSIG
Suggested lubricant:	F442 oil

Petroleum based oil of 100 to 200 SSU viscosity at 100°F (38°C) and an aniline point greater than 200°F (93°C)

(DO NOT USE OILS WITH ADDITIVES, COMPOUNDED OILS CONTAINING SOLVENTS, GRAPHITE, DETERGENTS, OR SYNTHETIC OILS.)

Compact & Standard Lubricators

	Port size	Bowl type	Flow SCFM	Part number (NPT) Twist drain	Part number (NPT) No drain
16L	1/4"	Poly / Metal guard	40		**16L12BE**
	1/4"	Metal / Sight gauge	40	**16L14BE**	
	3/8"	Poly / Metal guard	60		**16L22BE**
	3/8"	Metal / Sight gauge	60	**16L24BE**	
	1/2"	Poly / Metal guard	90		**16L32BE**
	1/2"	Metal / Sight gauge	90	**16L34BE**	
17L	1/2"	Poly / Metal guard	90		**17L32BE**
	1/2"	Metal / Sight gauge	90	**17L34BE**	
	3/4"	Poly / Metal guard	90		**17L42BE**
	3/4"	Metal / Sight gauge	90	**17L44BE**	

Parker Hannifin Corporation
Pneumatic Division
Richland, Michigan
www.parker.com/pneumatics

16L

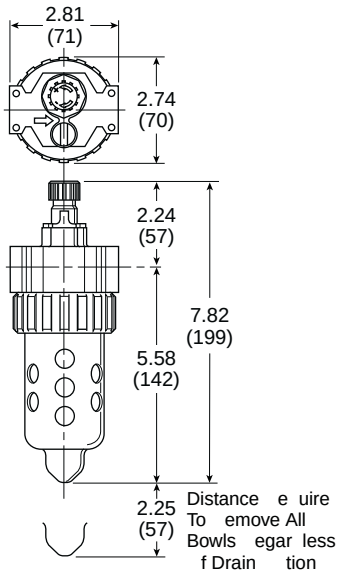

17L

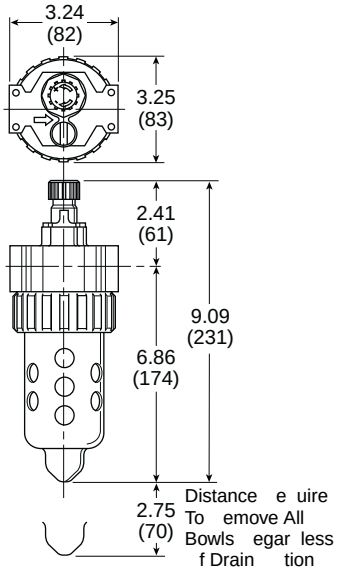

Service kits

Description			16L (Compact)	17L (Standard)
Adjustment knob			**P04121**	**P04121**
Bowl guard kit			**PS705P**	**PS805P**
Bowl Kits:	Poly bowl –	No drain	**PS746P**	**PS846P**
		Twist drain	**PS717P**	**PS817P**
		Pressure fill	**PS719P**	**PS819P**
		Remote fill	**PS728P**	**PS828P**
	Metal bowl –	Sight gauge / Twist drain	**PS729P**	**PS829P**
		Sight gauge / Pressure fill	**PS720P**	**PS820P**
Drain kit		Twist drain	**PS512P**	**PS512P**
Fill cap kit			**PS742P**	**PS742P**
Lubricator service kit			**PS748P**	**PS748P**
Mounting bracket kit			**PS743P**	**PS843P**
Oil –		1 Gal	**F442002**	**F442002**
		12 Quart case	**F442003**	**F442003**
		4 Gal case	**F442005**	**F442005**
Pressure fill adapter kit			**PS716P**	**PS716P**
Pressure fill button			**P11912**	**P11912**
Remote auto-fill device			**PS505CP**	**PS505CP**
Sight dome / Fill cap kit			**PS739P**	**PS739P**
Sight dome kit			**PS740P**	**PS740P**
Nylon sight dome kit			**PS740N**	**PS740N**

Parker Hannifin Corporation
Pneumatic Division
Richland, Michigan
www.parker.com/pneumatics

06L, 07L Prep-Air II Mist Lubricators

- Proportional oil delivery over a wide range of air flows
- Precision needle valve assures repeatable oil delivery and provides simple adjustment of delivery rate
- Bowl can be filled while air line is under pressure
- Transparent sight dome for 360° visibility
- 06L: 1/4", 3/8" & 1/2" ports (NPT & BSPP)
- 07L: 1/2" & 3/4" ports (NPT & BSPP)

06L

07L

Material specifications

Body	Zinc
Bowls –	
Transparent	Polycarbonate
Metal	Zinc
Bowl guards	Steel
Collar	Plastic (06, 07) or metal (07)
Drain	Plastic
Injector meter block & base assembly	Plastic
Seals	Nitrile
Sight dome	Polycarbonate
Sight gauge	Polyamide (Nylon)

Operating information

Pressure rating –	
Polycarbonate bowl	0 to 150 PSIG (0 to 10.4 bar)
Metal bowl	0 to 250 PSIG (0 to 17.2 bar)
Temperature rating –	
Polycarbonate bowl	32°F to 125°F (0°C to 52°C)
Metal bowl	32°F to 175°F (0°C to 80°C)
Minimum flow for lubrication:	.5 SCFM at 100 PSIG
Suggested lubricant:	F442 oil

Petroleum based oil of 100 to 200 SSU viscosity at 100°F (38°C) and an aniline point greater than 200°F (93°C)

(DO NOT USE OILS WITH ADDITIVES, COMPOUNDED OILS CONTAINING SOLVENTS, GRAPHITE, DETERGENTS, OR SYNTHETIC OILS.)

Compact & Standard Lubricators

	Port size	Bowl type	Flow SCFM	Part number (NPT) Twist drain	Part number (NPT) No drain
06L	1/4"	Poly / Metal guard	40		**06L12BE**
	1/4"	Metal / Sight gauge	40	**06L14BE**	
	3/8"	Poly / Metal guard	60		**06L22BE**
	3/8"	Metal / Sight gauge	60	**06L24BE**	
	1/2"	Poly / Metal guard	90		**06L32BE**
	1/2"	Metal / Sight gauge	90	**06L34BE**	
07L	1/2"	Poly / Metal guard	90		**07L32BE**
	1/2"	Metal / Sight gauge	90	**07L34BE**	
	3/4"	Poly / Metal guard	90		**07L42BE**
	3/4"	Metal / Sight gauge	90	**07L44BE**	

Parker Hannifin Corporation
Pneumatic Division
Richland, Michigan
www.parker.com/pneumatics

06L

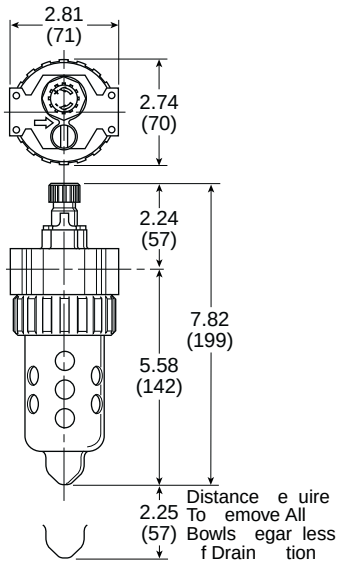

07L

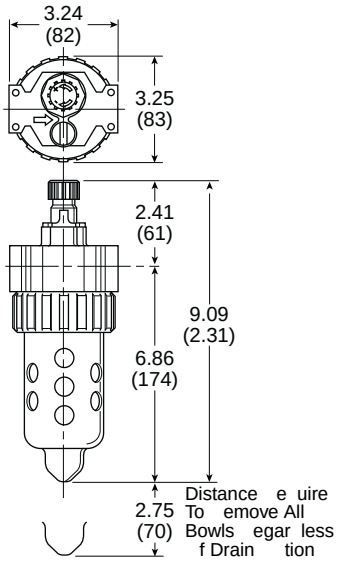

Service kits

Description			06L (Compact)	07L (Standard)
Adjustment knob			**P04121**	**P04121**
Bowl guard kit			**PS705P**	**PS805P**
Bowl Kits –	Poly bowl –	No drain	**PS746P**	**PS846P**
		Twist drain	**PS717P**	**PS817P**
		Pressure fill	**PS719P**	**PS819P**
		Remote fill	**PS728P**	**PS828P**
	Metal bowl –	Sight gauge / Twist drain	**PS729P**	**PS829P**
		Sight gauge / Pressure fill	**PS720P**	**PS820P**
Drain kit		Twist drain	**PS512P**	**PS512P**
Fill cap kit			**PS741P**	**PS741P**
Lubricator service kit			**PS718P**	**PS718P**
Mounting bracket kit			**PS743P**	**PS843P**
Oil –		1 Gal	**F442002**	**F442002**
		12 Quart case	**F442003**	**F442003**
		4 Gal case	**F442005**	**F442005**
Pressure fill adapter kit			**PS716P**	**PS716P**
Pressure fill button			**P11912**	**P11912**
Remote auto-fill device			**PS505CP**	**PS505CP**
Sight dome / fill cap kit			**PS738P**	**PS738P**
Sight dome kit			**PS740P**	**PS740P**
Nylon sight dome kit			**PS740N**	**PS740N**

Parker Hannifin Corporation
Pneumatic Division
Richland, Michigan
www.parker.com/pneumatics

Compact & Standard Prep-Air II Combinations

Close Nippled Combinations – 06 Compact & 07 Standard Series

- Regulator can be mounted with knob in up or down position
- 40 micron filter element standard, 5 micron optional
- Manual twist drain
- Relieving regulator

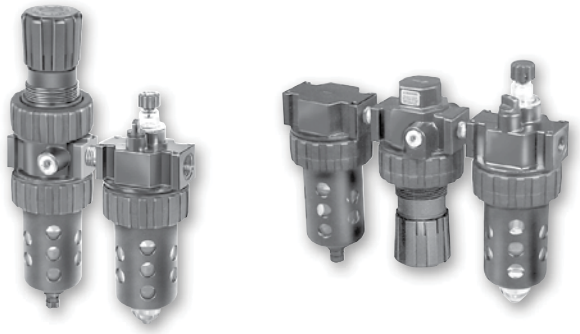

06G, 16G, 07G, 17G 2-Unit Close Nippled Combinations

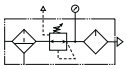

06G Shown

	Port	Bowl type	Element type	Filter drain type	Relief type	Lubricator drain type	Series	Model numbers	Series	Model numbers
	1/4"	Poly / Metal guard	40 micron	Twist	Relieving	None	06G	**06G12A13A2BC**	16G	**16G12A13A2BC**
	3/8"	Poly / Metal guard	40 micron	Twist	Relieving	None		**06G22A13A2BC**		**16G22A13A2BC**
	1/2"	Poly / Metal guard	40 micron	Twist	Relieving	None		**06G32A13A2BC**		**16G32A13A2BC**
	1/2"	Poly / Metal guard	40 micron	Twist	Relieving	None	07G	**07G32A13A2BD**	17G	**17G32A13A2BD**
	3/4"	Poly / Metal guard	40 micron	Twist	Relieving	None		**07G42A13A2BD**		**17G42A13A2BD**

06A, 16A, 07A, 17A 3-Unit Close Nippled Combinations

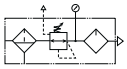

06A Shown

	Port	Bowl type	Element type	Filter drain type	Relief type	Lubricator drain type	Series	Model numbers	Series	Model numbers
	1/4"	Poly / Metal guard	40 micron	Twist	Relieving	None	06A	**06A12A13A2BC**	16A	**16A12A13A2BC**
	3/8"	Poly / Metal guard	40 micron	Twist	Relieving	None		**06A22A13A2BC**		**16A22A13A2BC**
	1/2"	Poly / Metal guard	40 micron	Twist	Relieving	None		**06A32A13A2BC**		**16A32A13A2BC**
	1/2"	Poly / Metal guard	40 micron	Twist	Relieving	None	07A	**07A32A13A2BD**	17A	**17A32A13A2BD**
	3/4"	Poly / Metal guard	40 micron	Twist	Relieving	None		**07A42A13A2BD**		**17A42A13A2BD**

⚠ WARNING
Product rupture can cause serious injury.
Do not connect regulator to bottled gas.
Do not exceed maximum primary pressure rating.

CAUTION:
REGULATOR PRESSURE ADJUSTMENT –
The working range of knob adjustment is designed to permit outlet pressures within their full range. Pressure adjustment beyond this range is also possible because the knob is not a limiting device. This is a common characteristic of most industrial regulators, and limiting devices may be obtained only by special design. For best performance, regulated pressure should always be set by increasing the pressure up to the desired setting.

Most popular.

Parker Hannifin Corporation
Pneumatic Division
Richland, Michigan
www.parker.com/pneumatics

Compact & Standard Prep-Air II Combinations

Modular Combinations – 06 Compact & 07 Standard Series

- Regulator can be mounted with knob in up or down position
- 40 micron filter element standard, 5 micron optional
- Manual twist drain
- Relieving regulator

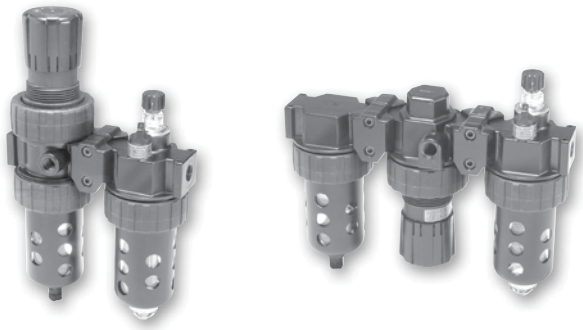

CAUTION:
REGULATOR PRESSURE ADJUSTMENT –
The working range of knob adjustment is designed to permit outlet pressures within their full range. Pressure adjustment beyond this range is also possible because the knob is not a limiting device. This is a common characteristic of most industrial regulators, and limiting devices may be obtained only by special design. For best performance, regulated pressure should always be set by increasing the pressure up to the desired setting.

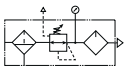

06H, 16H, 07H, 17H 2-Unit Modular Combinations

	Port	Bowl type	Element type	Filter drain type	Relief type	Lubricator drain type	Series	Model numbers	Series	Model numbers
06H Shown	1/4"	Poly / Metal guard	40 micron	Twist	Relieving	None	06H	**06H12A13A2BC**	16H	**16H12A13A2BC**
	3/8"	Poly / Metal guard	40 micron	Twist	Relieving	None		**06H22A13A2BC**		**16H22A13A2BC**
	1/2" *	Poly / Metal guard	40 micron	Twist	Relieving	None		**06H32A13A2BCG**		**16H32A13A2BCG**
	1/2"	Poly / Metal guard	40 micron	Twist	Relieving	None	07H	**07H32A13A2BD**	17H	**17H32A13A2BD**
	3/4"	Poly / Metal guard	40 micron	Twist	Relieving	None		**07H42A13A2BD**		**17H42A13A2BD**

* 06 / 16 Available with port blocks only.

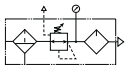

06B, 16B, 07B, 17B 3-Unit Modular Combinations

	Port	Bowl type	Element type	Filter drain type	Relief type	Lubricator drain type	Series	Model numbers	Series	Model numbers
06B Shown	1/4"	Poly / Metal guard	40 micron	Twist	Relieving	None	06B	**06B12A13A2BC**	16B	**16B12A13A2BC**
	3/8"	Poly / Metal guard	40 micron	Twist	Relieving	None		**06B22A13A2BC**		**16B22A13A2BC**
	1/2" *	Poly / Metal guard	40 micron	Twist	Relieving	None		**06B32A13A2BCG**		**16B32A13A2BCG**
	1/2"	Poly / Metal guard	40 micron	Twist	Relieving	None	07B	**07B32A13A2BD**	17B	**17B32A13A2BD**
	3/4"	Poly / Metal guard	40 micron	Twist	Relieving	None		**07B42A13A2BD**		**17B42A13A2BD**

* 06 / 16 available with port blocks only.

Modular service kits

Description	06 Series	07 Series
Body connectors	**PS754P**	**PS854P**
Lockout valves	**PS756P**	**PS856P**
Modular manifold block	**PS757P**	**PS857P**
Wall mounting kit	**PS755P**	**PS755P**

Description	Series	Size	NPT	BSPP	BSPT
Port block connector kits	06 Series –	1/4"	**PS750P**	**PS765P†**	**PS761P**
		3/8"	**PS751P**	**PS766P†**	**PS762P**
		1/2"	**PS752P***	**PS767P*†**	**PS799P***
	07 Series –	1/4"	**PS850P**	**PS865P**	**PS861P**
		3/8"	**PS851P**	**PS866P**	**PS862P**
		1/2"	**PS852P**	**PS867P‡**	**PS863P**
		3/4"	**PS853P**	**PS860P**	**PS864P**

Use 1/4 or 3/8 ported bodies. † 1/4, 3/8 & 1/2 inch meet ISO 1179-1 Standard. ‡ 1/2 inch meets ISO 1179-1 Standard.

⚠ WARNING
Product rupture can cause serious injury.
Do not connect regulator to bottled gas.
Do not exceed maximum primary pressure rating.

Most popular.

Parker Hannifin Corporation
Pneumatic Division
Richland, Michigan
www.parker.com/pneumatics

Combination Dimensions – 06 Compact & 07 Standard Series

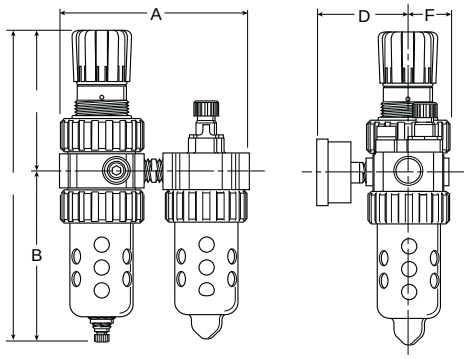

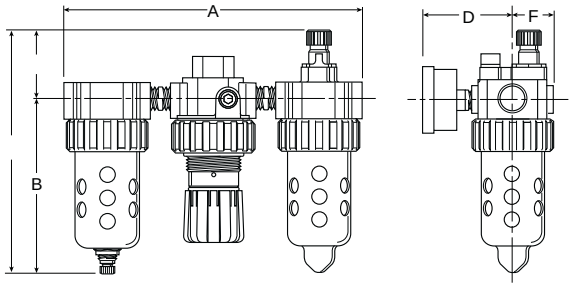

06G, 16G Series

A	B	C	D	E	F
6.13	5.69	4.69	3.18	10.38	1.37
(156)	(145)	(119)	(81)	(264)	(35)

07G, 17G Series

A	B	C	D	E	F
6.99	6.97	4.79	3.44	11.76	1.63
(178)	(177)	(122)	(87)	(299)	(41)

Inches (mm)
• All dimensions nominal.

06A, 16A Series

A	B	C	D	E	F
9.45	5.69	2.24	3.18	7.93	1.37
(240)	(145)	(57)	(81)	(201)	(35)

07A, 17A Series

A	B	C	D	E	F
10.74	6.97	2.41	3.44	9.38	1.63
(2738)	(177)	(61)	(87)	(238)	(41)

Inches (mm)
• All dimensions nominal.

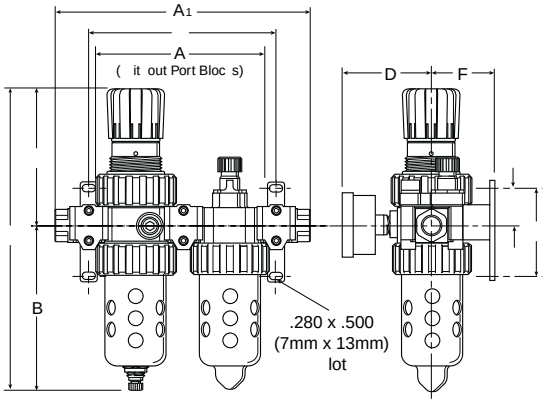

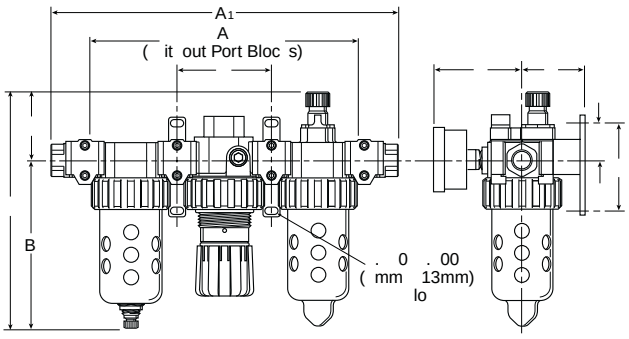

06H, 16H Series

A	A1	B	C	D	E
6.10	9.04	5.69	4.69	3.18	10.38
(155)	(230)	(145)	(119)	(81)	(264)
F	**G**	**H**	**J**		
2.00	3.58	1.40	6.65		
(51)	(91)	(36)	(169)		

07H, 17H Series

A	A1	B	C	D	E
7.00	10.28	6.97	4.79	3.44	11.76
(178)	(261)	(177)	(122)	(87)	(299)
F	**G**	**H**	**J**		
2.09	3.58	1.40	7.51		
(53)	(91)	(36)	(191)		

Inches (mm)
• All dimensions nominal.

06B, 16B Series

A	A1	B	C	D	E
9.46	12.39	5.69	2.24	3.18	7.93
(240)	(315)	(145)	(57)	(81)	(202)
F	**G**	**H**	**J**		
2.00	3.58	1.40	3.33		
(51)	(91)	(36)	(85)		

07B, 17B Series

A	A1	B	C	D	E
10.75	14.03	6.97	2.41	3.44	9.38
(273)	(356)	(177)	(61)	(87)	(238)
F	**G**	**H**	**J**		
2.18	3.58	1.40	3.76		
(55)	(91)	(36)	(95)		

Inches (mm)
• All dimensions nominal.

Parker Hannifin Corporation
Pneumatic Division
Richland, Michigan
www.parker.com/pneumatics

14F Miniature Particulate Filters

- Excellent water removal efficiency
- 5 micron element standard on 14F
- Integral 1/8", 1/4" ports (NPT, BSPP & BSPT)

Material specifications

Description		14F (Mini)
Body		Zinc
Bowl		Polycarbonate
Deflector, element holder, baffle		Plastic
Drains – Twist	Body & stem	Plastic
	Seals	Nitrile
Drains – Auto pulse	Piston & seals	Nitrile
	Stem, seat, adapter & washers	Aluminum
Filter element –	5 micron (Standard)	Plastic
	40 micron (Optional)	Plastic
	Adsorber (Optional)	Activated charcoal
Seals		Nitrile

Operating information

		14F
Operating pressure:	Poly bowl	0 to 150 PSIG (0 to 10.3 bar)
	Metal bowl	0 to 250 PSIG (0 to 17.2 bar)
	Auto pulse drain	10 to 250 PSIG (0.7 to 17.2 bar)
Operating temperature:	Poly bowl	32°F to 125°F (0°C to 52°C)
	Metal bowl	32°F to 175°F (0°C to 80°C)
	Auto pulse drain	125°F (52°C) or less

14F

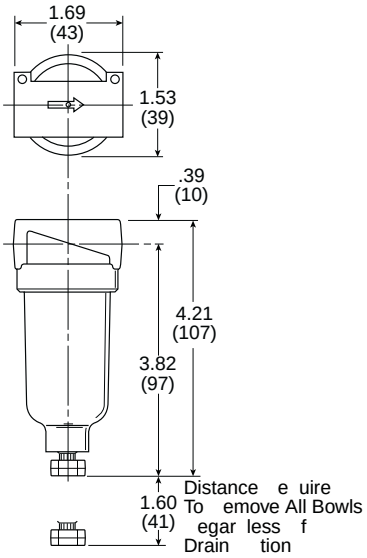

Service kits

Description			14F (Mini)
Bowl Kits	Poly bowl –	Auto pulse drain	**PS408BP**
		Twist drain	**PS404P**
	Metal bowl –	Auto drain	**PS451BP**
		Twist drain	**PS447BP**
Filter element kit –		40 micron	**PS401P**
		5 micron	**PS403P**
		Adsorber	**PS452P**
Mounting bracket kit			**PS417BP**

14F Particulate Filters

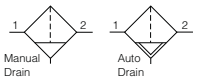

	Port size	Bowl type	Sight gauge	Flow SCFM	Element type	Part number (NPT) Twist drain	Part number (NPT) Automatic pulse drain
14F	1/8"	Poly	No	22	5 micron	**14F01BB**	**14F05BB**
	1/8"	Metal	No	22	5 micron	**14F03BB**	**14F07BB**
	1/4"	Poly	No	24	5 micron	**14F11BB**	**14F15BB**
	1/4"	Metal	No	24	5 micron	**14F13BB**	**14F17BB**

Most popular.

Parker Hannifin Corporation
Pneumatic Division
Richland, Michigan
www.parker.com/pneumatics

10F Miniature Coalescing Filters

- Removes liquid aerosols and sub-micron particles
- 0.01 micron element standard
- Integral 1/8", 1/4" ports (NPT, BSPP & BSPT)

Material specifications

Description		10F (Mini)
Body		Zinc
Bowl		Polycarbonate
Drains – Twist	Body & stem	Plastic
	Seals	Nitrile
Drains – Auto Pulse	Piston & seals	Nitrile
	Stem, seat, adapter & washers	Aluminum
Element holder		Plastic
Filter element	1.0 micron	Borosilicate & felt glass fibers
	0.01 micron	
Seals		Nitrile

10F

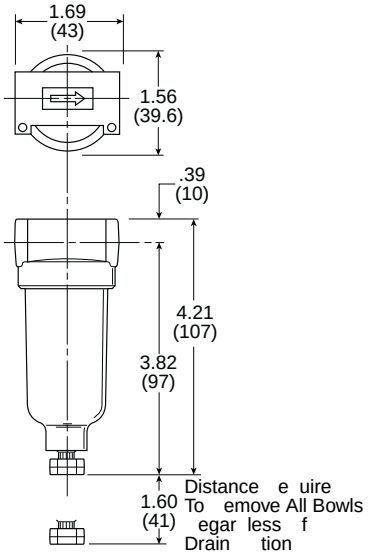

Operating information

		10F
Operating pressure:	Poly bowl	0 to 150 PSIG (0 to 10.3 bar)
	Metal bowl	0 to 250 PSIG (0 to 17.2 bar)
	Auto pulse drain	10 to 250 PSIG (0.7 to 17.2 bar)
Operating temperature:	Poly bowl	32°F to 125°F (0°C to 52°C)
	Metal bowl	32°F to 175°F (0°C to 80°C)
	Auto pulse drain	125°F (52°C) or less

Service kits

Description			10F (Mini)
Bowl Kits	Poly bowl –	Auto pulse drain	**PS408BP**
		Twist drain	**PS404P**
	Metal bowl	Auto drain	**PS451BP**
		Twist drain	**PS447BP**
Filter element kit –		Grade 6 (standard)	**PS446P**
		Grade 10 (optional	**PS456P**
Mounting bracket kit			**PS417BP**

Coalescing Filters

	Port size	Bowl type	Sight gauge	Flow SCFM	Element type	Part number (NPT) Twist drain	Part number (NPT) Automatic pulse drain
10F	1/8"	Poly	No	17	0.01 micron	**10F01ED**	**10F05ED**
	1/8"	Poly	No	19	1.0 micron	**10F01HD**	**10F05HD**
	1/8"	Metal	No	17	0.01 micron	**10F03ED**	**10F07ED**
	1/8"	Metal	No	19	1.0 micron	**10F03HD**	**10F07HD**
	1/4"	Poly	No	20	0.01 micron	**10F11ED**	**10F15ED**
	1/4"	Poly	No	24	1.0 micron	**10F11HD**	**10F15HD**
	1/4"	Metal	No	20	0.01 micron	**10F13ED**	**10F17ED**
	1/4"	Metal	No	24	1.0 micron	**10F13HD**	**10F17HD**

Most popular.

Parker Hannifin Corporation
Pneumatic Division
Richland, Michigan
www.parker.com/pneumatics

14R, 15R Miniature Regulators

- Unbalanced poppet standard
- Solid control piston with lip seal for extended life
- Non-rising adjusting knob
- Compact, 2.88 inch (73.2mm) high by 1.65 inch (42mm) wide
- Easily serviced
- 14R: 1/8" & 1/4" ports (NPT, BSPP & BSPT)
- 15R: 1/4" & 3/8" ports (NPT, BSPP & BSPT)

14R

15R

Material specifications

Adjusting nut	Brass
Adjusting stem & spring	Steel
Body	Zinc
Bonnet, seat, piston & valve poppet	Plastic
Seals	Nitrile

Operating information

	14R (Mini), 15R (Economy)
Pressure rating:	0 to 300 PSIG (0 to 20.4 bar)
Temperature rating:	32°F to 125°F (0°C to 52°C)
Low temperature:	-4°F to 125°F (-20°C to 52°C)
Secondary pressure ranges –	
Standard pressure	2 to 125 PSIG (0 to 8.6 bar)
Medium pressure	1 to 60 PSIG (0 to 4.1 bar)
Medium pressure	1 to 30 PSIG (0 to 2.1 bar)
Low pressure	1 to 15 PSIG (0 to 1 bar)

Regulators

	Port size	Pressure range	Flow SCFM	Part number (NPT) Without gauge	Part number (NPT) With gauge
14R	1/8"	30 PSIG	13	**14R010FC**	**14R015FC**
	1/8"	60 PSIG	13	**14R011FC**	**14R016FC**
	1/8"	125 PSIG	13	**14R013FC**	**14R018FC**
	1/4"	30 PSIG	15	**14R110FC**	**14R115FC**
	1/4"	60 PSIG	15	**14R111FC**	**14R116FC**
	1/4"	125 PSIG	15	**14R113FC**	**14R118FC**
15R	1/4"	30 PSIG	21	**15R110FB**	**15R115FB**
	1/4"	60 PSIG	21	**15R111FB**	**15R116FB**
	1/4"	125 PSIG	21	**15R113FB**	**15R118FB**
	3/8"	30 PSIG	28	**15R210FB**	**15R216FB**
	3/8"	60 PSIG	28	**15R211FB**	**15R215FB**
	3/8"	125 PSIG	28	**15R213FB**	**15R218FB**

⚠ WARNING
Product rupture can cause serious injury.
Do not connect regulator to bottled gas.
Do not exceed maximum primary pressure rating.

Most popular.

CAUTION:
REGULATOR PRESSURE ADJUSTMENT –
The working range of knob adjustment is designed to permit outlet pressures within their full range. Pressure adjustment beyond this range is also possible because the knob is not a limiting device. This is a common characteristic of most industrial regulators, and limiting devices may be obtained only by special design. For best performance, regulated pressure should always be set by increasing the pressure up to the desired setting.

Parker Hannifin Corporation
Pneumatic Division
Richland, Michigan
www.parker.com/pneumatics

14R (Mini)

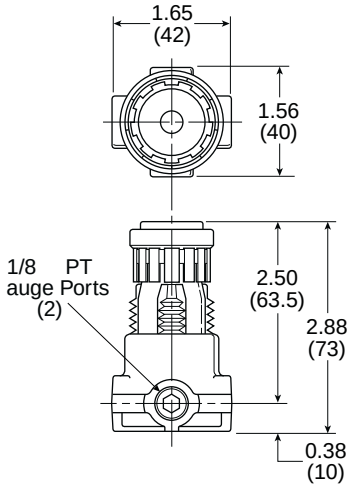

15R (Economy)

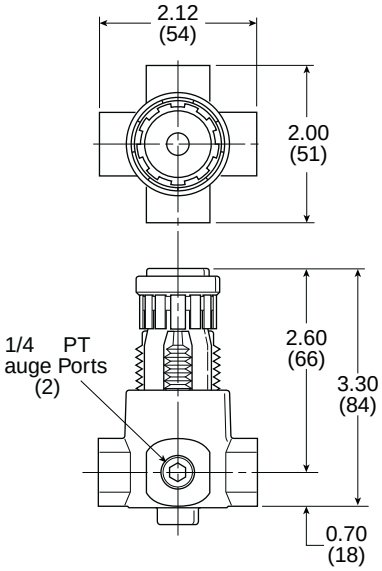

Service kits

Description		14R (Mini)	15R (Economy)
Body service kit – unbalanced			**PS424BP**
Bonnet assembly kit		**L01369**	**L01369**
Bonnet tamperproof kit		**P01265**	
Gauges – 40mm (1-1/2") round 1/8" center back mount	30 PSIG, 1/8" NPT (0 to 2.1 bar)	**K4515N18030**	**K4515N18030**
	60 PSIG, 1/8" NPT (0 to 4.1 bar)	**K4515N18060**	**K4515N18060**
	160 PSIG, 1/8" NPT (0 to 11.0 bar)	**K4515N18160**	**K4515N18160**
50mm (2") round 1/4" center back mount	60 PSIG, 1/4" NPT (0 to 4.1 bar)	**K4520N14060**	**K4520N14060**
	160 PSIG, 1/4" NPT (0 to 11.0 bar)	**K4520N14160**	**K4520N14160**
Mounting bracket kit (includes panel mount nut)		**PS417BP**	**PS417BP**
Panel mount nuts –	Plastic	**P78652**	**P78652**
	Metal	**P01531**	**P01531**
Poppet / piston kits –	Unbalanced, non-relieving	**PS428P**	
	Unbalanced, relieving	**PS426P**	
Seal kit	Unbalanced		**PS454B**
Springs –	1-15 PSIG range (Yellow)	**P01176**	**P01176**
	1-30 PSIG range (Black)	**P01175**	**P01175**
	1-60 PSIG range (White)	**P01174**	**P01174**
	2-125 PSIG range (Gold)	**P01173**	**P01173**

Parker Hannifin Corporation
Pneumatic Division
Richland, Michigan
www.parker.com/pneumatics

R34 Miniature Regulators

- Diaphragm operated for fast operation
- Large Diaphragm to valve area ratio for precise regulation and high flow capacity
- Balanced valve design for precise regulation
- Available in 2 or 4 port design
- Available with a manifold mount to minimize plumbing
- Suitable for low temperature applications
- Non-rising adjusting knob
- 1/8" & 1/4" ports (NPT & BSPP)

R342 / R344

R342-0MC

Material specifications

Description	R34 (Mini)
Body	Aluminum
Bonnet	Acetal
Diaphragm & seals	Nitrile
Springs	Steel
Panel nut	Acetal
Valve assembly	Brass

Operating information

	R34 (Mini)
Supply pressure:	300 PSIG (20.4 bar) max
Temperature rating:	-40°F to 150°F (-40°C to 65.5°C)

R34 Regulator, relieving

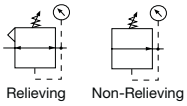

Port size	Pressure range	Flow SCFM	Part number: Without gauge	Part number: With gauge
1/8"	0 to 30 PSIG (0 to 2.1 bar)	17	**R344-01A**	**R344-01AG**
1/8"	0 to 60 PSIG (0 to 4.1 bar)	17	**R344-01B**	**R344-01BG**
1/8"	0 to 125 PSIG (0 to 8.6 bar)	17	**R344-01C**	**R344-01CG**
1/4"	0 to 30 PSIG (0 to 2.1 bar)	19	**R344-02A**	**R344-02AG**
1/4"	0 to 60 PSIG (0 to 4.1 bar)	19	**R344-02B**	**R344-02BG**
1/4"	0 to 125 PSIG (0 to 8.6 bar)	19	**R344-02C**	**R344-02CG**
Manifold Mount			**R342-0MA**	
Manifold Mount			**R342-0MB**	
Manifold Mount			**R342-0MC**	

R342 / R344

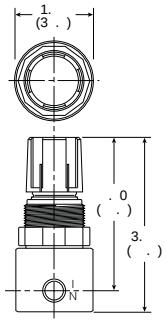

R342-0MC

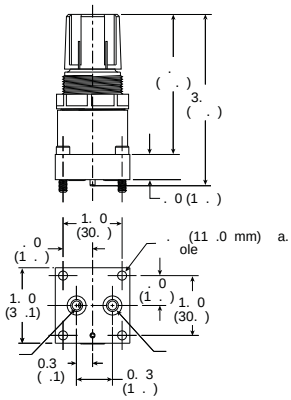

Service kits

Diagram assembly	Non-relieving	**GRP-96-726**
	Relieving	**GRP-96-725**
Gauges –	60 PSIG, 1/8" NPT (0 to 4.1 bar)	**K4515N18060**
	160 PSIG, 1/8" NPT (0 to 11.0 bar)	**K4515N18160**
Mounting bracket kit (includes panel mount nut)		**SA161X57**
Panel mount nuts	Plastic	**R05X51-P**
	Aluminum	**R05X51-A**
Springs –	0 to 30 PSIG (0 to 2.1 bar)	**GRP-95-111**
	0 to 60 PSIG (0 to 4.1 bar)	**GRP-96-718**
	0 to 125 PSIG (0 to 8.6 bar)	**GRP-96-717**

⚠ WARNING
Product rupture can cause serious injury.
Do not connect regulator to bottled gas.
Do not exceed maximum primary pressure rating.

Most popular.

CAUTION:
REGULATOR PRESSURE ADJUSTMENT –
The working range of knob adjustment is designed to permit outlet pressures within their full range. Pressure adjustment beyond this range is also possible because the knob is not a limiting device. This is a common characteristic of most industrial regulators, and limiting devices may be obtained only by special design. For best performance, regulated pressure should always be set by increasing the pressure up to the desired setting.

Parker Hannifin Corporation
Pneumatic Division
Richland, Michigan
www.parker.com/pneumatics

20R, R24 / R25, R45 / R46 Miniature Regulators

- 20R: Rugged brass body for water service
- R24 / R25, R45 / R46: Constructed with a combination of N.S.F. and F.D.A. approved materials
- Unbalanced poppet standard
- Non-rising, push-to-lock adjusting knob
- Diaphragm operated
- 20R: 1/8" & 1/4" ports (NPT & BSPP)
- R24 / R25: 1/8" & 1/4" ports (NPT & BSPP)
- R45 / R46: 1/4" & 3/8" ports (NPT & BSPP)

20R

R24 / R25

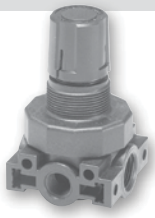
R45 / R46

Material specifications

	20R	R25 / R45	R24 / R46
Adjusting screw	Steel	Steel	Steel
Body		Acetal	Acetal
Body, bottom plug, diaphragm button	Brass		
Bonnet & seat	Plastic	Acetal	Acetal
Diaphragm		Buna N	EPDM
Seals	Buna N	Buna N	EPDM
Springs	Steel	Stainless	Stainless
Valve poppet	Brass	Buna N	EPDM

Operating information

	20R
Pressure rating:	0 to 300 PSIG (0 to 20.4 bar)
Secondary pressure ranges –	
Standard pressure	2 to 125 PSIG (0 to 8.6 bar)
Medium pressure	1 to 60 PSIG (0 to 4.1 bar)
Medium pressure	1 to 25 PSIG (0 to 2.1 bar)
Temperature rating:	32°F to 125°F (0°C to 52°C)
	R24 / R25, R45 / R46
Pressure rating:	0 to 150 PSIG (0 to 10 bar)
Temperature rating:	40°F to 125°F (4°C to 52°C)

Regulators

	Port size	Pressure range	Flow	Part number (NPT) Air service, relieving	Water service, non-relieving
R24 / R25	1/8"	25 PSIG		**R25-01A**	**R24-01AK**
	1/8"	60 PSIG		**R25-01B**	**R24-01BK**
	1/8"	125 PSIG		**R25-01C**	**R24-01CK**
	1/4"	25 PSIG		**R25-02A**	**R24-02AK**
	1/4"	60 PSIG		**R25-02B**	**R24-02BK**
	1/4"	125 PSIG		**R25-02C**	**R24-02CK**
R45 / R46	1/4"	25 PSIG	R45: 35 SCFM; R46: 3 GPM	**R45-02A**	**R46-02AK**
	1/4"	60 PSIG	R45: 35 SCFM; R46: 3 GPM	**R45-02B**	**R46-02BK**
	1/4"	125 PSIG	R45: 35 SCFM; R46: 3 GPM	**R45-02C**	**R46-02CK**
	3/8"	25 PSIG	R45: 35 SCFM; R46: 3 GPM	**R45-03A**	**R46-03AK**
	3/8"	60 PSIG	R45: 35 SCFM; R46: 3 GPM	**R45-03B**	**R46-03BK**
	3/8"	125 PSIG	R45: 35 SCFM; R46: 3 GPM	**R45-03C**	**R46-03CK**
				Water service, relieving	**Water service, non-relieving**
20R	1/8"	25 PSIG	1.25 GPM	**20R011FC**	**20R011GC**
	1/8"	60 PSIG	1.25 GPM	**20R061FC**	**20R061GC**
	1/8"	125 PSIG	1.25 GPM	**20R013FC**	**20R013GC**
	1/4"	25 PSIG	1.25 GPM	**20R111FC**	**20R111GC**
	1/4"	60 PSIG	1.25 GPM	**20R161FC**	**20R161GC**
	1/4"	125 PSIG	1.25 GPM	**20R113FC**	**20R113GC**

NOTE: 1.25 Dia. (32mm) hole required for panel mounting.

⚠ WARNING
Product rupture can cause serious injury.
Do not connect regulator to bottled gas.
Do not exceed maximum primary pressure rating.

Most popular.

CAUTION:
REGULATOR PRESSURE ADJUSTMENT –
The working range of knob adjustment is designed to permit outlet pressures within their full range. Pressure adjustment beyond this range is also possible because the knob is not a limiting device. This is a common characteristic of most industrial regulators, and limiting devices may be obtained only by special design. For best performance, regulated pressure should always be set by increasing the pressure up to the desired setting.

Parker Hannifin Corporation
Pneumatic Division
Richland, Michigan
www.parker.com/pneumatics

20R

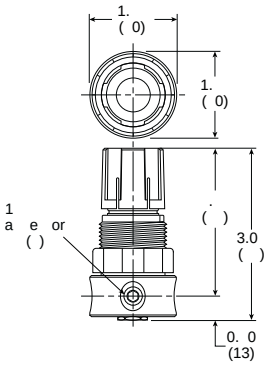

R24/R25

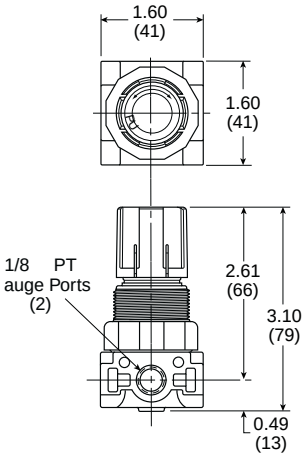

R45/R46

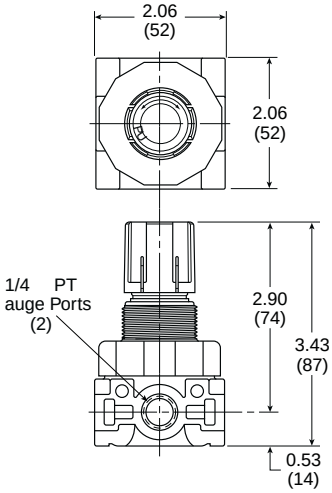

Service kits

Description		20R	R24	R25	R45	R46
Bonnet kit		**PCKR364Y**				
Bonnet tamperproof kit		**PCKR364T**				
Mounting bracket kit (includes panel mount nut)		**SA161X57**	**SA161X57**	**SA161X57**	**SA161X57**	**SA161X57**
Panel mount nuts –	Plastic	**R05X51-P**	**R05X51-P**	**R05X51-P**	**R05X51-P**	**R05X51-P**
	Aluminum	**R05X51-A**	**R05X51-A**	**R05X51-A**	**R05X51-A**	**R05X51-A**
Repair kits –	Non-relieving	**PRKR163Y**	**RKR24KY**	**RKR25KY**	**RKR45KY**	**RKR45KY**
	Relieving	**PRKR164Y**	**RKR24Y**	**RKR25Y**	**RKR45Y**	**RKR45Y**
Springs –	0 to 25 PSIG (0 to 1.7 bar)		**SPR-375-1**	**SPR-375-1**	**SPR-46**	**SPR-46**
	0 to 60 PSIG (0 to 4.1 bar)		**SPR-376**	**SPR-376**	**SPR-47**	**SPR-47**
	0 to 125 PSIG (0 to 8.6 bar)		**SPR-377**	**SPR-377**	**SPR-48**	**SPR-48**

Most popular.

Parker Hannifin Corporation
Pneumatic Division
Richland, Michigan
www.parker.com/pneumatics

14E, B34 Miniature Filter / Regulators

14E
- Excellent water removal efficiency
- Unbalanced poppet standard
- Solid control piston for extended life
- Space saving package offers both filter and regulator features in one integral unit
- Non-rising adjustment knob
- Two full flow 1/8" gauge ports

B34
- Excellent water removal efficiency diaphragm operated for fast operation
- Large diaphragm to valve area for precise regulation and high flow capacity
- Balanced valve design for precise regulation
- Space saving package offers both filter and regulator features in one integral unit
- Non-rising adjustment knob

14E

B34

Operating information

	14E		B34
Pressure rating –			
Polycarbonate bowl	0 to 150 PSIG (0 to 10.3 bar)		0 to 150 PSIG (0 to 10.3 bar)
Metal bowl	0 to 250 PSIG (0 to 17.2 bar)		0 to 300 PSIG (0 to 17.2 bar)
Secondary pressure ranges:	Standard pressure	2 to 125 PSIG (0 to 8.6 bar)	Reduced pressure ranges
	Medium pressure	1 to 30 PSIG (0 to 2.1 bar)	0 to 25 PSIG (0 to 1.7 bar)
	Medium pressure	1 to 60 PSIG (0 to 4.1 bar)	1 to 60 PSIG (0 to 4.1 bar)
	Low pressure	1 to 15 PSIG (0 to 1 bar)	2 to 125 PSIG (0.15 to 8.5 bar)
Temperature rating –			
Polycarbonate bowl	32°F to 125°F (0°C to 52°C)		40°F to 125°F (4.4°C to 52°C)
Metal bowl	32°F to 175°F (0°C to 80°C)		40°F to 125°F (4.4°C to 52°C)

Miniature Filter / Regulators

	Port size	Bowl type	Drain type	Flow SCFM	Element type	Part number (NPT) Pressure range 30 PSIG	60 PSIG	125 PSIG
14E	1/8"	Poly	Twist	16	5 micron	**14E01B10FC**	**14E01B11FC**	**14E01B13FC**
	1/8"	Poly	Auto pulse	16	5 micron	**14E05B10FC**	**14E05B11FC**	**14E05B13FC**
	1/8"	Metal	Twist	16	5 micron	**14E03B10FC**	**14E03B11FC**	**14E03B13FC**
	1/8"	Metal	Auto pulse	16	5 micron	**14E07B10FC**	**14E07B11FC**	**14E07B13FC**
	1/4"	Poly	Twist	18	5 micron	**14E11B10FC**	**14E11B11FC**	**14E11B13FC**
	1/4"	Poly	Auto pulse	18	5 micron	**14E15B10FC**	**14E15B11FC**	**14E15B13FC**
	1/4"	Metal	Twist	18	5 micron	**14E13B10FC**	**14E13B11FC**	**14E13B13FC**
	1/4"	Metal	Auto pulse	18	5 micron	**14E17B10FC**	**14E17B11FC**	**14E17B13FC**
B34	1/8"	Poly	Twist	17	5 micron			**B344-01AGC**
	1/8"	Metal	Twist	17	5 micron			**B344-01DGC**
	1/4"	Poly	Twist	19	5 micron			**B344-02AGC**
	1/4"	Metal	Twist	19	5 micron			**B344-02DGC**

⚠ WARNING
Product rupture can cause serious injury.
Do not connect regulator to bottled gas.
Do not exceed maximum primary pressure rating.

CAUTION:
REGULATOR PRESSURE ADJUSTMENT –
The working range of knob adjustment is designed to permit outlet pressures within their full range. Pressure adjustment beyond this range is also possible because the knob is not a limiting device. This is a common characteristic of most industrial regulators, and limiting devices may be obtained only by special design. For best performance, regulated pressure should always be set by increasing the pressure up to the desired setting.

☐ Most popular.

Parker Hannifin Corporation
Pneumatic Division
Richland, Michigan
www.parker.com/pneumatics

14E

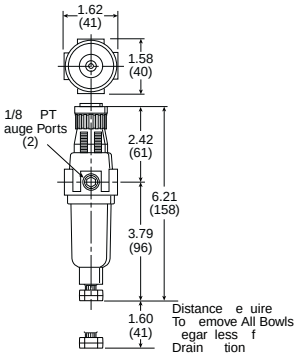

B34

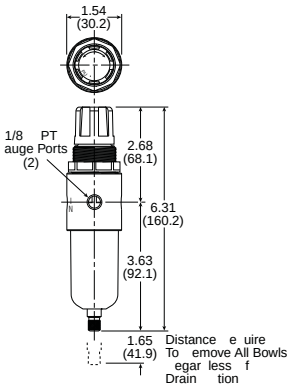

Material specifications

Description			14E (Mini)	B34
Adjusting nut			Brass	
Adjusting stem & spring			Steel	
Body			Zinc	Aluminum
Bonnet, knob, seat, piston, holder & deflector			Plastic	
Bowls		Transparent	Polycarbonate	Polycarbonate
		Metal	Zinc	Zinc
Drains	Manual – twist	Body & stem	Plastic	
		Seals	Nitrile	
	Automatic – pulse	Piston & seals	Nitrile	
		Stem, seat, adapter & washers	Aluminum	
Elastomers				Buna N
Filter elements		5 Micron (standard)	Plastic	Sintered polyethylene
		40 Micron (optional)	Plastic	
		Adsorber (optional)	Activated charcoal	
Filter retainer, vane plate				Acetal
Innervalve, diaphragm, button, drain				Brass
Seals			Nitrile	

Service kits

Adjusting knob				**RRP-16-005-000**
Bonnet tamperproof kit			**P01265**	
Bowl kits	Poly bowl –	Automatic pulse drain	**PS408BP**	**BK504SY**
		Twist drain	**PS404P**	**BK504Y**
	Metal bowl –	Automatic drain	**PS451BP**	**BK505SY**
		Twist drain	**PS447BP**	**BK505Y**
Drain kits		Automatic pulse drain		**RK504SY**
Filter element kits –		5 Micron	**PS403P**	**FRP-96-729**
		40 Micron	**PS401P**	
		Adsorber	**PS452P**	
Gauges –		30 PSIG (0 to 2.1 bar)	**K4515N18030**	
		60 PSIG (0 to 4.1 bar)	**K4515N18060**	**K4515N18060**
		160 PSIG (0 to 11.0 bar)	**K4515N18160**	**K4515N18160**
Mounting bracket kit* (includes panel mount nut)			**PS417BP**	**SA161X57**
Panel mount nuts –		Plastic	**P78652**	**R05X51-P**
		Aluminum		**R05X51-A**
Poppet / piston kits –		Unbalanced, non-relieving	**PS428P**	
		Unbalanced, relieving	**PS426P**	
Repair kits –		Non-relieving, diaphragm, valve assembly		**GRP-96-726**
		Relieving, diaphragm, valve assembly		**GRP-96-725**
Springs –		15 PSIG	**P01176** (yellow)	**GRP-95-111**
		30 PSIG	**P01175** (black)	
		60 PSIG	**P01174** (white)	**GRP-96-718 (black)**
		125 PSIG	**P01173** (gold)	**GRP-96-717**

Most popular.

Parker Hannifin Corporation
Pneumatic Division
Richland, Michigan
www.parker.com/pneumatics

04L Miniature Mist Lubricators

- Proportional oil delivery over a wide range of air flows
- Precision needle valve assures repeatable oil delivery and provides simple adjustment of delivery rate
- Ideal for low and high flow applications with changing air flow
- Transparent sight dome for 360° visibility

Material specifications

Body		Zinc
Bowls	Transparent	Polycarbonate
	Metal	Zinc
Drains		Plastic
Seals		Nitrile
Sight Dome		Polycarbonate

Operating information

Pressure ratings –	
Polycarbonate bowl	0 to 150 PSIG (0 to 10.3 bar)
Metal bowl	0 to 250 PSIG (0 to 17.2 bar)
Temperature rating –	
Polycarbonate bowl	32°F to 125°F (0°C to 52°C)
Metal bowl	32°F to 175°F (0°C to 80°C)
Minimum flow for lubrication:	0.5 SCFM at 100 PSIG

04L Miniature Lubricators

Port size	Bowl type	Drain type	Flow SCFM	Part number (NPT)
1/8"	Poly	None	20	**04L00GB**
1/8"	Metal without sight gauge	Twist	20	**04L03GB**
1/4"	Poly	None	20	**04L10GB**
1/4"	Metal without sight gauge	Twist	20	**04L13GB**

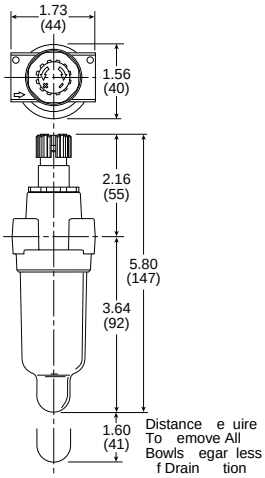

Service kits

			04L (Mini)
Bowl kits	Poly bowl	No drain	**PS421P**
		Twist drain	**PS420P**
	Metal bowl	Twist drain	**PS447BP**
Mounting bracket kit			**PS4197**
Oil		1 Quart	**F442001**
		12 Quart case	**F442003**
		4 Gallon case	**F442005**

Parker Hannifin Corporation
Pneumatic Division
Richland, Michigan
www.parker.com/pneumatics

Miniature Close Nippled Combinations

Close Nippled Combinations – 14 Miniature Series

- Regulator can be mounted with knob in up or down position
- 5 micron filter element standard, 40 micron optional
- Manual twist drain
- Relieving regulator

Close Nippled Combinations

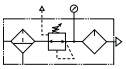

	Port size	Bowl type	Element type	Filter drain type	Relief type	Lubricator drain type	Part number (NPT)
14G	1/8"	Poly	5 micron	Twist	Relieving	None	**14G01B13F0GD**
	1/4"	Poly	5 micron	Twist	Relieving	None	**14G11B13F0GD**
14A	1/8"	Poly	5 micron	Twist	Relieving	None	**14A01B13F0GF**
	1/4"	Poly	5 micron	Twist	Relieving	None	**14A11B13F0GF**

14G (Close nippled 2-unit)

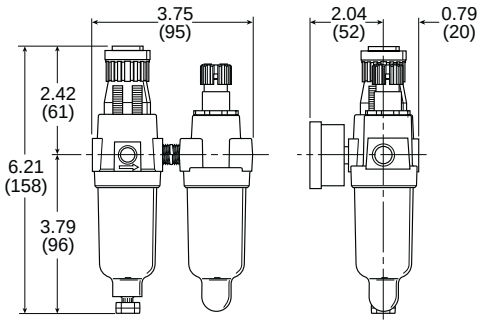

14A (Close nippled 3-unit)

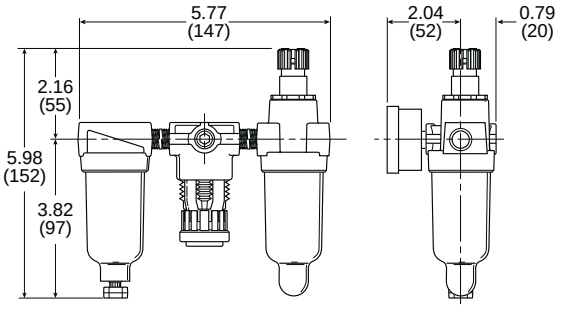

Service kits

Mounting bracket kits –	14E, 14F, 14R	**PS417BP**
	04L	**PS419**

⚠ WARNING
Product rupture can cause serious injury.
Do not connect regulator to bottled gas.
Do not exceed maximum primary pressure rating.

CAUTION:
REGULATOR PRESSURE ADJUSTMENT –
The working range of knob adjustment is designed to permit outlet pressures within their full range. Pressure adjustment beyond this range is also possible because the knob is not a limiting device. This is a common characteristic of most industrial regulators, and limiting devices may be obtained only by special design. For best performance, regulated pressure should always be set by increasing the pressure up to the desired setting.

Most popular.

Parker Hannifin Corporation
Pneumatic Division
Richland, Michigan
www.parker.com/pneumatics

P3NF Hi-Flow Particulate Filters

- Excellent water removal efficiency
- Port blocks (PB) available to provide 1-1/2" port extension to 1" ported bodies
- 40 micron element standard
- Metal bowl with sight gauge standard
- 3/4", 1", & 1-1/2" ports (NPT, BSPP & BSPT)

Material specifications

Description		P3NF (Hi-Flow)
Body		Aluminum
Bowl		Aluminum
Deflector		Plastic
Drain		Plastic
Filter element	5 micron	Plastic
	40 micron	Plastic
	Adsorber	Activated charcoal
Seals		Nitrile
Sight gauge		Polyamide (Nylon)

Operating information

		P3NF (Hi-Flow)
Operating pressure:	Metal bowl	0 to 250 PSIG (0 to 17.2 bar)
	Auto float drain	15 to 250 PSIG (1.0 to 17.2 bar)
Operating temperature:	Metal bowl	32°F to 175°F (0°C to 80°C)

P3NF (Hi-Flow)

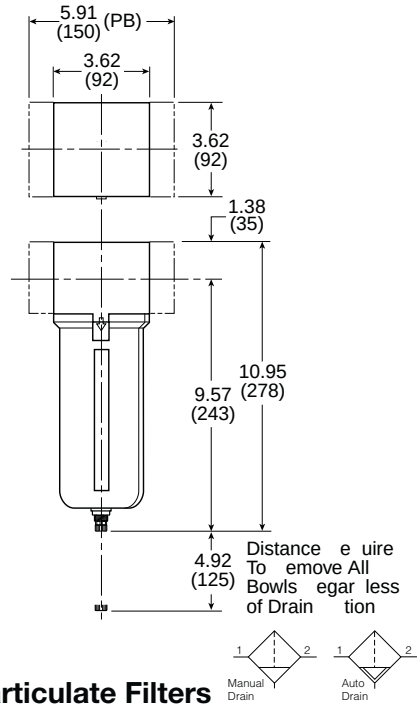

Service kits

Description		P3NF (Hi-Flow)
Bowl Kits –	Sight gauge / auto float	**P3NKA00BSA**
	Sight gauge / twist drain	**P3NKA00BSM**
	Sight gauge / push 'n' drain	**P3NKA00BSP**
Bowl latch kit		**C11A33**
DPI replacement kit		**PS781P**
Drain kit –	Auto drain	**PS506P**
	Twist drain	**PS512P**
Filter element kit –	40 micron	**P3NKA00ESG**
	5 micron	**P3NKA00ESE**
	Adsorber	**P3NKA00ESA**
Mounting bracket kit		**P3NKA00MW**
Sight gauge kit		**P3NKA00PE**

P3NF Particulate Filters

	Port size	Bowl type	Sight gauge	Flow SCFM	Element type	Part number (NPT) Twist drain	Part number (NPT) Automatic float drain
P3NF	3/4"	Metal	Yes	270	40 micron	**P3NFA96GSM**	**P3NFA96GSA**
	1"	Metal	Yes	300	40 micron	**P3NFA98GSM**	**P3NFA98GSA**
	1-1/2"#	Metal	Yes	310		**P3NFA9PGSM**	**P3NFA9PGSA**

1" port body with 1-1/2" port block

Most popular.

Parker Hannifin Corporation
Pneumatic Division
Richland, Michigan
www.parker.com/pneumatics

P3NF Hi-Flow Coalescing Filters

- Removes liquid aerosols and sub-micron particles
- Port blocks (PB) available to provide 1-1/2" port extension to 1" ported bodies
- 0.01 micron element standard
- Metal bowl with sight gauge standard
- 3/4", 1", & 1-1/2" ports (NPT, BSPP & BSPT)

Material specifications

Description		P3NF (Hi-Flow)
Body		Aluminum
Bowl		Aluminum
Deflector		Plastic
Drain		Plastic
Filter element –	1.0 micron	Borosilicate & felt glass fibers
	0.01 micron	
Seals		Nitrile
Sight gauge		Polyamide (Nylon)

Operating information

		P3NF (Hi-Flow)
Operating pressure:	Metal bowl	0 to 250 PSIG (0 to 17.2 bar)
	Auto float drain	15 to 250 PSIG (1.0 to 17.2 bar)
Operating temperature:	Metal bowl	32°F to 175°F (0°C to 80°C)

P3NF (Hi-Flow)

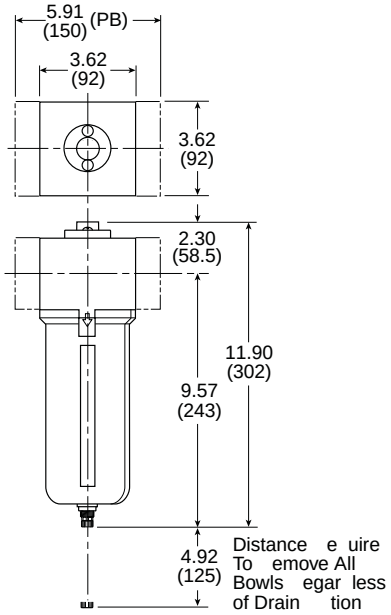

Service kits

Description		P3NF (Hi-Flow)
Bowl Kits –	Sight gauge / auto float	**P3NKA00BSA**
	Sight gauge / twist drain	**P3NKA00BSM**
	Sight gauge / push 'n' drain	**P3NKA00BSP**
Bowl latch kit		**C11A33**
DPI replacement kit		**PS781P**
Drain kit –	Auto drain	**PS506P**
	Twist drain	**PS512P**
Filter element kit –	Grade 6 (standard)	**P3NKA00ESCB**
	Grade 10 (optional	**P3NKA00ES9**
Mounting bracket kit		**P3NKA00MW**
Sight gauge kit		**P3NKA00PE**

Coalescing Filters

	Port size	Bowl type	Sight gauge	Flow SCFM	Element type	Part number (NPT) Twist drain	Part number (NPT) Automatic float drain
P3NF	3/4"	Metal	Yes	130	0.01 micron	**P3NFA96DSM**	**P3NFA96DSA**
	3/4"	Metal	Yes	195	1.0 micron	**P3NFA96QSM**	**P3NFA96QSA**
	1"	Metal	Yes	140	0.01 micron	**P3NFA98DSM**	**P3NFA98DSA**
	1"	Metal	Yes	215	1.0 micron	**P3NFA98QSM**	**P3NFA98QSA**
	1-1/2" #	Metal	Yes	225	0.01 micron	**P3NFA9PDSM**	**P3NFA9PDSA**
	1-1/2" #	Metal	Yes	150	1.0 micron	**P3NFA9PQSM**	**P3NFA9PQSA**

1" port body with 1-1/2" port block

Most popular.

Parker Hannifin Corporation
Pneumatic Division
Richland, Michigan
www.parker.com/pneumatics

P3NR Hi-Flow Regulators

- Port blocks (PB) available to provide 1-1/2" port extension to 1" ported bodies
- Self relieving feature plus balanced poppet provides quick response and accurate pressure regulation
- Solid control piston for extended life

P3NR Hi-Flow Regulators

	Port size	Gauge	Flow (SCFM)	Part number (NPT), Relieving
P3NR	3/4"	No	200	**P3NRA96BNN**
	1"	No	300	**P3NRA98BNN**
	1-1/2"	No	300	**P3NRA9PBNN**
	3/4"	125 PSI	200	**P3NRA96BNG**
	1"	125 PSI	300	**P3NRA98BNG**
	1-1/2"	125 PSI	300	**P3NRA9PBNG**

Operating information

Pressure rating, maximum:	250 PSIG (17.2 bar)
Temperature rating:	32°F to 175°F (0°C to 80°C)

P3NR (Hi-Flow)

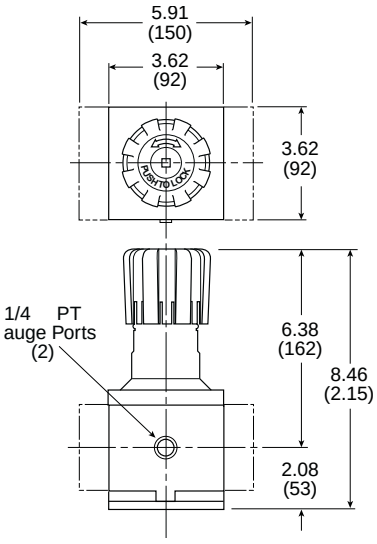

Material specifications

	P3NR
Adjusting screw	Steel
Body	Aluminum
Bonnet	Aluminum
Knob	Plastic
Piston	Plastic
Poppet assembly	Brass
Seals	Nitrile
Springs – poppet & control	Steel

Service kits

Body service kit		
Control knob		**P3NKA00PN**
Gauges – 50mm (2") round 1/4" center back mount	60 PSIG (0 to 4.1 bar)	**K4520N14060**
	160 PSIG (0 to 11.0 bar)	**K4520N14160**
	300 PSIG (0 to 20.0 bar)	**K4520N14300**
44mm (1-3/4") digital round 1/4" center back mount	0-160 PSIG / 0-11 bar / 0-1.1 MPa	**K4517N14160**
Mounting bracket kit		**P3NKA00MW**
Repair kits –	Non-relieving	**P3NKA00RN**
	Relieving	**P3NKA00RR**
Springs –	1-60 PSIG	**C10A1304**
	2 to 125 PSIG	**SPR-47**
	5 to 250 PSIG	**SPR-48**

⚠ WARNING
Product rupture can cause serious injury.
Do not connect regulator to bottled gas.
Do not exceed maximum primary pressure rating.

CAUTION:
REGULATOR PRESSURE ADJUSTMENT –
The working range of knob adjustment is designed to permit outlet pressures within their full range. Pressure adjustment beyond this range is also possible because the knob is not a limiting device. This is a common characteristic of most industrial regulators, and limiting devices may be obtained only by special design. For best performance, regulated pressure should always be set by increasing the pressure up to the desired setting.

Most popular.

Parker Hannifin Corporation
Pneumatic Division
Richland, Michigan
www.parker.com/pneumatics

P3NR Hi-Flow Pilot Operated Regulators

- Port blocks (PB) available to provide 1-1/2" port extension to 1" ported bodies
- Self relieving feature plus balanced poppet provides quick response and accurate pressure regulation
- Solid control piston for extended life

Operating information

Pressure rating, maximum:	250 PSIG (17.2 bar)
Temperature rating:	32°F to 175°F (0°C to 80°C)
Flow capacity SCFM:	3/4"; 300 1"; 300 1-1/2"; 350

P3NR Hi-Flow Pilot Operated Regulators

	Port size	Gauge	Part number (NPT), relieving
P3NR	3/4"	No	**P3NRA96BPP**
	1"	No	**P3NRA98BPP**
	1-1/2"	No	**P3NRA9PBPP**
	3/4"	160 PSI	**P3NRA96BPG**
	1"	160 PSI	**P3NRA98BPG**
	1-1/2"	160 PSI	**P3NRA9PBPG**

P3NR (Hi-Flow)

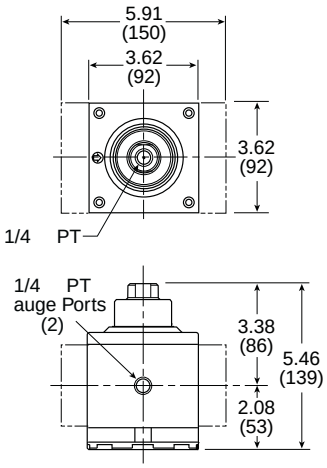

Material specifications

Adjusting stem	Steel
Body	Aluminum
Bonnet	Aluminum
Piston	Plastic
Poppet assembly	Brass
Seals	Nitrile
Springs – poppet	Steel

Service kits

Gauges – 50mm (2") round 1/4" center back mount	60 PSIG (0 to 4.1 bar)	**K4520N14060**
	160 PSIG (0 to 11.0 bar)	**K4520N14160**
	300 PSIG (0 to 20.0 bar)	**K4520N14300**
44mm (1-3/4") digital round 1/4" center back mount	0-160 PSIG / 0-11 bar / 0-1.1 MPa	**K4517N14160**
Mounting bracket kit		**P3NKA00MW**
Repair kits	Relieving	**P3NKA00PD**

⚠ WARNING
Product rupture can cause serious injury.
Do not connect regulator to bottled gas.
Do not exceed maximum primary pressure rating.

CAUTION:
REGULATOR PRESSURE ADJUSTMENT –
The working range of knob adjustment is designed to permit outlet pressures within their full range. Pressure adjustment beyond this range is also possible because the knob is not a limiting device. This is a common characteristic of most industrial regulators, and limiting devices may be obtained only by special design. For best performance, regulated pressure should always be set by increasing the pressure up to the desired setting.

☐ Most popular.

Parker Hannifin Corporation
Pneumatic Division
Richland, Michigan
www.parker.com/pneumatics

P3NE Hi-Flow Filter / Regulators

- Port blocks (PB) available to provide 1-1/2" port extension to 1" ported bodies
- Excellent water removal efficiency
- Metal bowl with sight gauge
- Large filter element surface guarantees low pressure drop and increased element life
- Twist drain as standard, optional auto drain
- Self relieving feature plus balanced poppet provides quick response and accurate pressure regulation
- Solid control piston for extended life

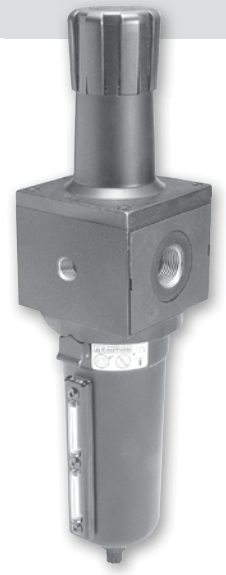

Material specifications

Adjusting stem		Steel
Body, bonnet, bowl		Aluminum
Drain		Plastic
Filter elements –	5 micron (standard)	Plastic
	40 micron (optional)	Plastic
	Adsorber (optional)	Activated charcoal
Knob		Plastic
Piston		Plastic
Polyamide (Nylon)		Polyamide (nylon)
Springs – poppet & control		Steel

Operating information

Pressure ratings:	0 to 250 PSIG (0 to 17.2 bar)
Temperature rating:	32°F to 175°F (0°C to 80°C)

P3NE Hi-Flow Filter / Regulators

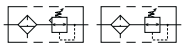

	Port size	Bowl type	Drain type	Flow SCFM	Element type	Part number (NPT)
P3NE	3/4"	Metal / Sight gauge	Twist	250	40 micron	**P3NEA96GSMBNN**
	3/4"	Metal / Sight gauge	Auto float	250	40 micron	**P3NEA96GSABNN**
	1"	Metal / Sight gauge	Twist	250	40 micron	**P3NEA98GSMBNN**
	1"	Metal / Sight gauge	Auto float	250	40 micron	**P3NEA98GSABNN**
	1-1/2" #	Metal / Sight gauge	Twist	250	40 micron	**P3NEA9PGSMBNN**
	1-1/2" #	Metal / Sight gauge	Auto float	250	40 micron	**P3NEA9PGSABNN**

1" port body with 1-1/2" port block

⚠ WARNING
Product rupture can cause serious injury.
Do not connect regulator to bottled gas.
Do not exceed maximum primary pressure rating.

CAUTION:
REGULATOR PRESSURE ADJUSTMENT –
The working range of knob adjustment is designed to permit outlet pressures within their full range. Pressure adjustment beyond this range is also possible because the knob is not a limiting device. This is a common characteristic of most industrial regulators, and limiting devices may be obtained only by special design. For best performance, regulated pressure should always be set by increasing the pressure up to the desired setting.

☐ Most popular.

Parker Hannifin Corporation
Pneumatic Division
Richland, Michigan
www.parker.com/pneumatics

P3NE (Hi-Flow)

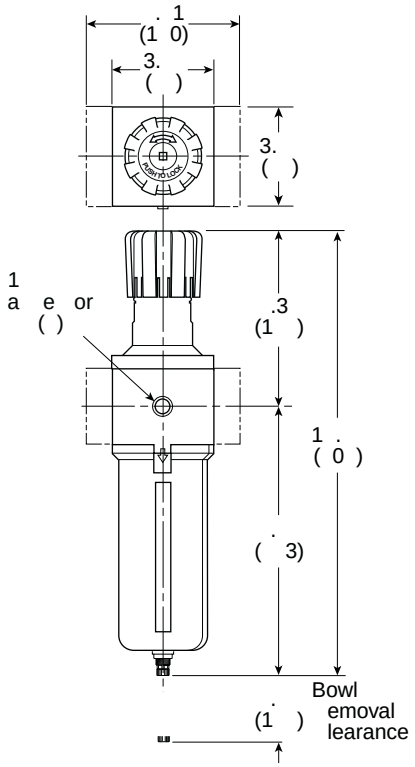

Service kits

Description		P3NE
Bowl kits: Metal bowl –	Automatic drain	**P3NKA00BSA**
	Twist drain	**P3NKA00BSM**
	Push 'N' Drain	**P3NKA00BSP**
Bowl latch kit		**C11A33**
Control knob		**P3NKA00PN**
Drain kits –	Automatic float drain	**PS506P**
	Semi-auto drain	**PS511P**
	Twist drain	**PS512P**
	Push 'N' Drain	**PS513P**
Filter element kits –	40 Micron	**P3NKA00ESG**
	5 Micron	**P3NKA00ESE**
	Adsorber	**P3NKA00ESA**
Gauges – 50mm (2") round 1/4" center back mount	60 PSIG (0 to 4.1 bar)	**K4520N14060**
	160 PSIG (0 to 11.0 bar)	**K4520N14160**
	300 PSIG (0 to 20.0 bar)	**K4520N14300**
44mm (1-3/4") digital round 1/4" center back mount	0-160 PSIG / 0-11 bar / 0-1.1 MPa	**K4517N14160**
Mounting bracket kit* (includes panel mount nut)		**P3NKA00MW**
Service kits –	Non-relieving	**P3NKA00RN**
	Relieving	**P3NKA00RR**
Sight gauge kit		**P3NKA00PE**
Springs –	1- 60 PSIG rang)	**C10A1304**
	2- 125 PSIG range	**C10A1308**
	5-250 PSIG range (white)	**C10A1317**

Parker Hannifin Corporation
Pneumatic Division
Richland, Michigan
www.parker.com/pneumatics

P3NL Hi-Flow Mist Lubricators

- Port blocks (PB) available to provide 1-1/2" port extension to 1" ported bodies
- Proportional oil delivery over a wide range of air flows
- Bowl can be filled while air line is under pressure
- Transparent sight dome for 360° visibility
- 3/4", 1" & 1-1/2" ports (NPT, BSPP & BSPT)

Material specifications

Body	Aluminum
Bowls	Aluminum
Drains – twist (optional)	Plastic
Injector meter block & base assembly	Plastic
Seals	Nitrile
Sight dome	Polycarbonate
Sight gauge	Polyamide (Nylon)

Operating information

Pressure ratings:	0 to 250 PSIG (0 to 17.2 bar)
Temperature rating:	32°F to 175°F (0°C to 80°C)
Flow capacity:	3/4" — 240 SCFM 1" — 250 SCFM 1-1/2" — 260 SCFM
Minimum Flow for Lubrication:	6.6 SCFM at 100 PSIG
Suggested lubricant:	F442 oil

Petroleum based oil of 100 to 200 SSU viscosity at 100°F (38°C) and an aniline point greater than 200°F (93°C)

(DO NOT USE OILS WITH ADDITIVES, COMPOUNDED OILS CONTAINING SOLVENTS, GRAPHITE, DETERGENTS, OR SYNTHETIC OILS.)

P3NL Hi-Flow Lubricators

	Port size	Bowl type	Drain type	Flow SCFM	Part number (NPT)
P3NL	3/4"	Metal / Sight gauge	None	240	**P3NLA96LSN**
	1"	Metal / Sight gauge	None	250	**P3NLA98LSN**
	1-1/2" #	Metal / Sight gauge	None	260	**P3NLA9PLSN**

1" port body with 1-1/2" port block

P3NL (Hi-Flow)

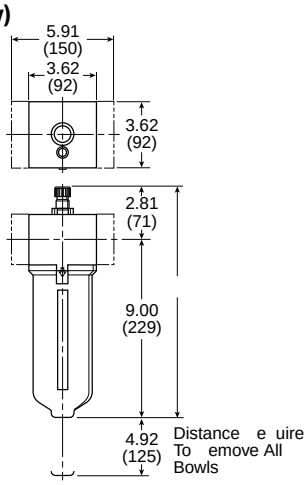

Service kits

		P3NL
Adjustment knob		**P04121**
Bowl kits: Metal bowl –	No drain	**P3NKA00BSN**
	Twist drain	**P3NKA00BSM**
Bowl latch kit		**C11A33**
Drain kit	Twist drain	**PS512P**
Fill cap kit		**P3NKA00PL**
Mounting bracket kit		**P3NKA00MW**
Oil –	1 Quart	**F442001**
	12 Quart case	**F442003**
	4 Gallon case	**F442005**
Pressure fill adapter kit		**P3NKA00PK**
Service kit		**P3NKA00RL**
Sight dome kits –	Polycarbonate	**PS740P**
	Nylon	**PS740N**
Sight gauge kit		**P3NKA00PE**

Most popular.

Parker Hannifin Corporation
Pneumatic Division
Richland, Michigan
www.parker.com/pneumatics

P3N Hi-Flow Combinations

Combinations – P3N Hi-Flow Series

- Regulator can be mounted with knob in up or down position
- 40 micron filter element standard, 5 micron optional
- Manual twist drain
- Relieving regulator

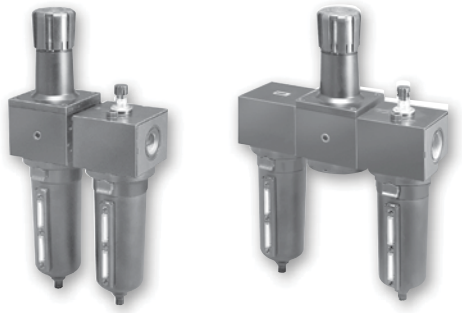

Close Nippled Combinations

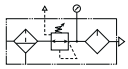

		Port size	Bowl type	Element type	Filter drain type	Relief type	Lubricator drain type	Part number (NPT)
P3N3A		3/4"	Metal	40 micron	Twist	Relieving	None	**P3N3A96SGMNNLNA**
		1"	Metal	40 micron	Twist	Relieving	None	**P3N3A98SGMNNLNA**
		1-1/2" #	Metal	40 micron	Twist	Relieving	None	**P3N3A9PSGMNNLNA**
P3N3B		3/4"	Metal	40 micron	Twist	Relieving	None	**P3N3B96SGMNNLNA**
		1"	Metal	40 micron	Twist	Relieving	None	**P3N3B98SGMNNLNA**
		1-1/2" #	Metal	40 micron	Twist	Relieving	None	**P3N3B9PSGMNNLNA**

Notes: All combo part numbers are with regulator knob in up position.
1" Port body with 1-1/2" port block.

Modular Combinations

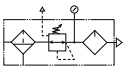

		Port size	Bowl type	Element type	Filter drain type	Pressure range	Relief type	Lubricator drain type	Part number (NPT)
P3NCA		3/4"	Metal	40 micron	Twist	0-125	Relieving	None	**P3NCA96SGMNNLNA**
		1"	Metal	40 micron	Twist	0-125	Relieving	None	**P3NCA98SGMNNLNA**
		1-1/2" #	Metal	40 micron	Twist	0-125	Relieving	None	**P3NCA9PSGMNNLNA**
P3NCB		3/4"	Metal	40 micron	Twist	0-125	Relieving	None	**P3NCB96SGMNNLNA**
		1"	Metal	40 micron	Twist	0-125	Relieving	None	**P3NCB98SGMNNLNA**
		1-1/2" #	Metal	40 micron	Twist	0-125	Relieving	None	**P3NCB9PSGMNNLNA**

Notes: All combo part numbers are with regulator knob in up position.
1" Port body with 1-1/2" port block.

⚠ WARNING
Product rupture can cause serious injury.
Do not connect regulator to bottled gas.
Do not exceed maximum primary pressure rating.

CAUTION:
REGULATOR PRESSURE ADJUSTMENT –
The working range of knob adjustment is designed to permit outlet pressures within their full range. Pressure adjustment beyond this range is also possible because the knob is not a limiting device. This is a common characteristic of most industrial regulators, and limiting devices may be obtained only by special design. For best performance, regulated pressure should always be set by increasing the pressure up to the desired setting.

Most popular.

Parker Hannifin Corporation
Pneumatic Division
Richland, Michigan
www.parker.com/pneumatics

P3N3A (Close nippled 2-unit)

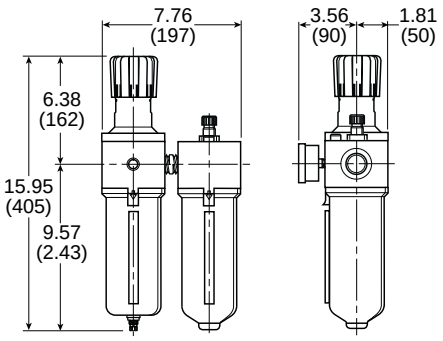

P3NCA (Modular 2-unit)

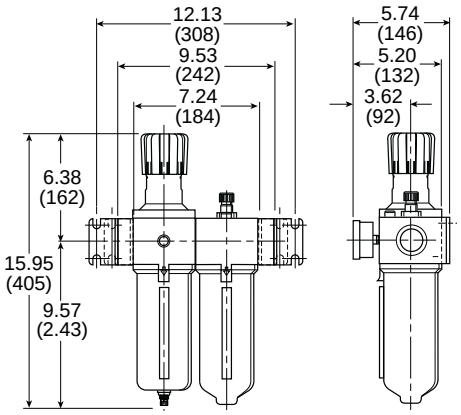

P3N3B (Close nippled 3-unit)

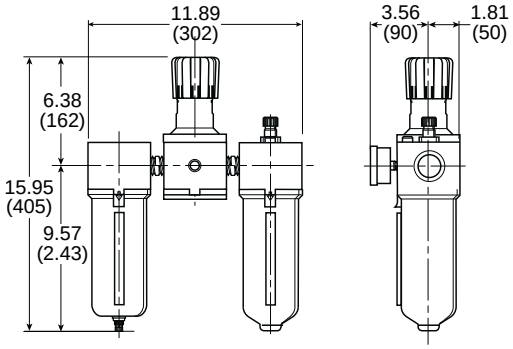

P3NCB (Modular 3-unit)

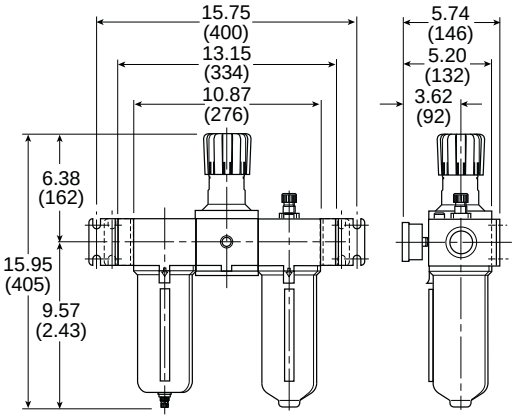

Service kits

Mounting bracket kit			**P3NKA00MW**
Replacement body cover			**P3NKA00PM**
Port block kits	**3/4"**	**1"**	**1-1/2"**
Individual filters, individual regulators and 2-piece filter and regulator assemblies:			
NPT	**P3NKB96CP**	**P3NKB98CP**	**P3NKB9BCP**
BSPP	**P3NKB16CP**	**P3NKB18CP**	**P3NKB1BCP**
2 and 3 piece combinations including a lubricator (FR/L & FRL), individual lubricators, individual coalescing filters and 2-piece filter and coalescer assemblies:			
NPT	**P3NKB96CL**	**P3NKB98CL**	**P3NKB9BCL**
BSPP	**P3NKB16CL**	**P3NKB18CL**	**P3NKB1BCL**

Parker Hannifin Corporation
Pneumatic Division
Richland, Michigan
www.parker.com/pneumatics

F602 General Industrial Particulate Filters

- Excellent water removal efficiency
- For heavy duty applications with minimum pressure drop requirement
- Unique deflector plate that creates swirling of the air stream ensuring maximum water and dirt separation
- Large filter element surface guarantees low pressure drop and increased element life
- 40 micron filter element standard, 5 micron available
- Metal bowl with sight gauge standard
- Twist drain as standard, optional auto drain
- Large bowl capacity
- Optional high capacity bowl(s) available

3/4" & 1"

1-1/4" & 1-1/2"

Material specifications

Description		(Hi-Flow) F602-06W F602-08W F602-06E F602-08E	(Hi-Flow) F602-10W F602-12W F602-10E F602-12E
Body		Zinc	Zinc
Bowl	(E) 32 oz	Aluminum	Aluminum
	(W) 16 oz	Zinc	Zinc
Drains	Housing R	Acetal	Acetal
	Housing Q	Bronze	Bronze
Drain - Twist	Body & stem	Brass	Brass
Filter element	5 micron	Polypropylene	Polypropylene
	40 micron	Polypropylene	Polypropylene
Seals		Nitrile	Nitrile
Sight gauge		Nylon	Nylon

Operating information

		F602 (Hi-Flow)
Operating pressure:	Aluminum bowl (E) 32 oz.	0 to 300 PSIG (0 to 20.4 bar)
	Zinc (W) 16 oz.	0 to 250 PSIG (0 to 17.2 bar)
	With internal auto drain (R)	20 to 175 PSIG (1.4 to 11.9 bar)
	With external auto drain (Q)	0 to 250 PSIG (0 to 17.2 bar)
Operating temperature:	Aluminum bowl (E) 32 oz.	40°F to 150°F (4.4°C to 65.6°C)
	Zinc (W) 16 oz.	40°F to 150°F (4.4°C to 65.6°C)
	With internal auto drain (R)	40°F to 125°F (4.4°C to 52°C)
	With external auto drain (Q)	40°F to 150°F (4.4°C to 65.6°C)

Particulate Filters

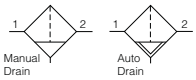

		Port size	Bowl type	Bowl size	Flow SCFM	Element type	Part number (NPT) Twist drain	Part number (NPT) Automatic float drain
F602		3/4"	Metal / Sight gauge	16 oz	270	40 micron	**F602-06WJ**	**F602-06WJR**
		3/4"	Metal / Without sight gauge	32 oz	270	40 micron	**F602-06EJ**	**F602-06EJR**
		1"	Metal / Sight gauge	16 oz	300	40 micron	**F602-08WJ**	**F602-08WJR**
		1"	Metal / Without sight gauge	32 oz	300	40 micron	**F602-08EJ**	**F602-08EJR**
F602		1-1/4"	Metal / Sight gauge	16 oz	380	40 micron	**F602-10WJ**	**F602-10WJR**
		1-1/4"	Metal / Without sight gauge	32 oz	380	40 micron	**F602-10EJ**	**F602-10EJR**
		1-1/2"	Metal / Sight gauge	16 oz	450	40 micron	**F602-12WJ**	**F602-12WJR**
		1-1/2"	Metal / Without sight gauge	32 oz	450		**F602-12EJ**	**F602-12EJR**

☐ Most popular.

Parker Hannifin Corporation
Pneumatic Division
Richland, Michigan
www.parker.com/pneumatics

F602-06W, F602-08W (Hi-Flow)

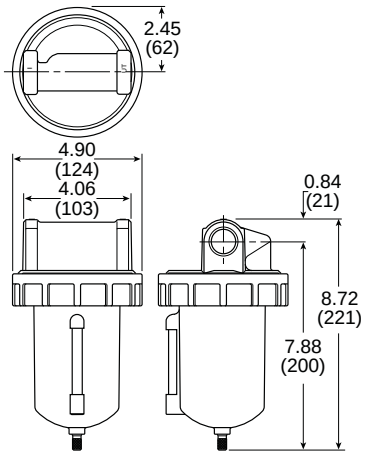

F602-06E, F602-08E (Hi-Flow)

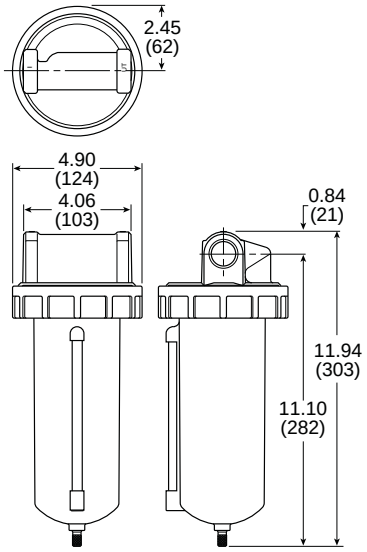

F602-10W, F602-12W (Hi-Flow)

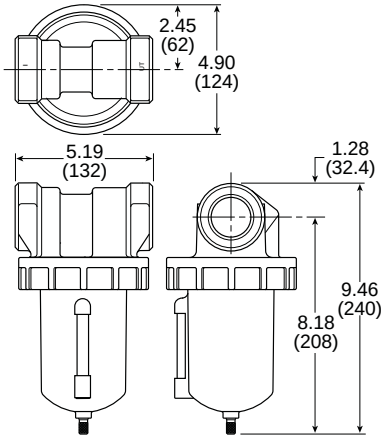

F602-10E, F602-12E (Hi-Flow)

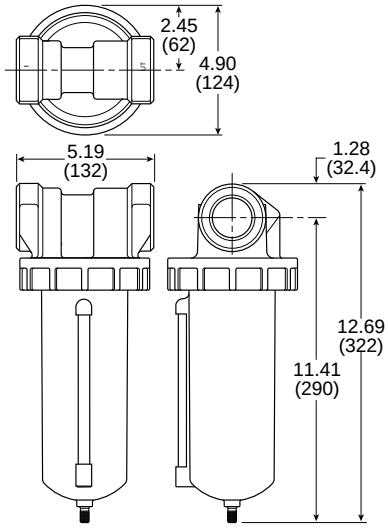

Service kits

Description		(Hi-Flow) F602-06W, F602-08W, F602-06E, F602-08E	(Hi-Flow) F602-10W, F602-12W, F602-10E, F602-12E
Bowl kits –	Aluminum (E) 32 oz	**BK603B**	**BK603B**
	Zinc / sight gauge (W) 16 oz	**BK605WB**	**BK605WB**
Drain kits –	Internal auto	**SA602MD**	**SA602MD**
	Manual	**SA600Y7-1**	**SA600Y7-1**
Filter element kits –	40 micron	**EK602B**	**EK602B**
	5 micron	**EK602VB**	**EK602VB**
Mounting bracket kits –	3/4" unit	**SA200AW57**	
	1" unit	**SA200CW57**	
Repair kits –	Deflector, baffle assy, & retaining rod	**RK602B**	**RK602B**
	External auto drain	**RK602D**	**RK602D**
	Internal auto drain	**RK602MD**	**RK602MD**
	Metal bowl / sight gauge	**RKB605WB**	**RKB605WB**

Parker Hannifin Corporation
Pneumatic Division
Richland, Michigan
www.parker.com/pneumatics

35F, 43F General Industrial Particulate Filters

- Heavy-duty cast aluminum housings to withstand operating pressures up to 250 PSIG
- Differential pressure indicator to eliminate the guesswork of element replacement
- Unique drain mounting plate design offers a trouble-free method for interchanging and installing external drains

35F

43F

Material specifications

Description	35F, 43F (Hi-Flow)
Baffle	Plated steel
Body	Aluminum
Bowl	Aluminum
Deflector	Plated steel
Filter element	Polyethylene
Seals	Fluorocarbon
Stud	Plated steel

Operating information

		35F (Hi-Flow)	43F (Hi-Flow)
Operating pressure:	With DP gauge & without DPI	250 PSIG (17.2 bar)	250 PSIG (17.2 bar)
	With DPI	150 PSIG (10.3 bar)	150 PSIG (10.3 bar)
Operating temperature:		32°F to 150°F (0°C to 65.5°C)	32°F to 150°F (0°C to 65.5°C)

Particulate Filters

	Port size	Bowl type	Flow SCFM	Element type	Part number (NPT) Automatic drain
35F	1-1/2	Metal	1280	5 micron	**35F77BAP**
	2	Metal	1400	5 micron	**35F87BAP**
43F	3	Metal	2900	5 micron	**43FN7BAP**

Most popular.

Parker Hannifin Corporation
Pneumatic Division
Richland, Michigan
www.parker.com/pneumatics

35F (Hi-Flow)

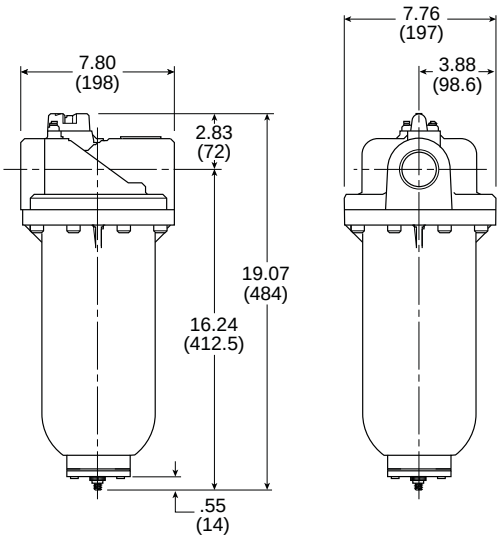

43F (Hi-Flow)

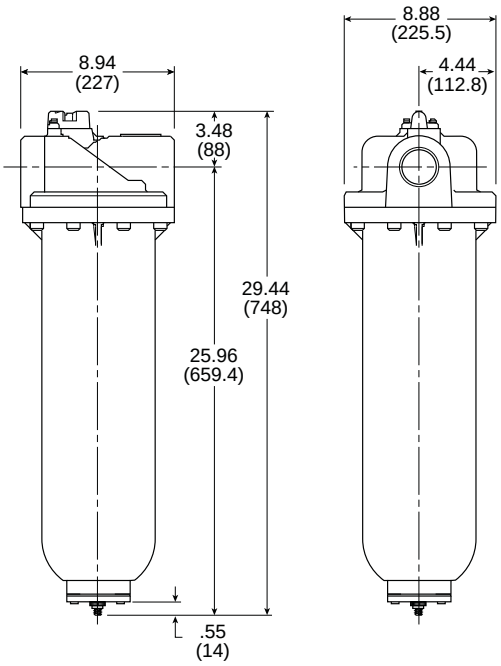

Service kits

Description		35F (Hi-Flow)	43F (Hi-Flow)
DPI replacement kit		**DP2-02-001**	**DP2-02-001**
DPI cap	Pressures over 150 PSIG	**GRP-95-022**	**GRP-95-022**
DP gauge		**DP3-01-000**	**DP3-01-000**
Automatic float drain kit	Auto internal drain 1/8"	**P32KA00DA**	**P32KA00DA**
Manual drain kit	with 1/2" drain plate	**GRP-95-392**	**GRP-95-392**
Drain plate kit	1/2 NPT tapped port	**GRP-95-393**	**GRP-95-393**
Filter element kit	5 micron	**FRP-95-505**	**FRP-95-508**

Parker Hannifin Corporation
Pneumatic Division
Richland, Michigan
www.parker.com/pneumatics

F701 General Industrial Coalescing Filters

- Removes liquid aerosols and sub-micron particles
- Protects pneumatic systems from contamination that standard particulate filters will not catch
- Two different grade elements available
- Differential pressure indicator (pop-up) standard
- Differential pressure gauge optional
- High flow design

Material specifications

Description		F701 (Hi-Flow)
Body & flange ring		Zinc
Bowl	(E) 32 oz	Aluminum
	(L) 100 oz	Aluminum
Drains	Housing R	Acetal
	Housing Q	Bronze
	Manual	Brass
Element end cap		Urethane
Filter element	0.01 micron	Borosilicate fibers & felt
	1.0 micron	
Seals & float		Buna N
Springs		Stainless steel

Operating information

	F701 (Hi-Flow)	
Maximum pressure:	"R" drain	175 PSIG (12.4 bar)
	"T" drain	250 PSIG (17.2 bar)
	"Q" drain	250 PSIG (17.2 bar)
Maximum temperature:		32°F to 150°F (0°C to 65.6°C)
Maximum temperature with "T", "R" or "Q" drains:		125°F (52°C)
Minimum rated flow:		20% or rated flow

Coalescing Filters

	Port size	Bowl type	Bowl size	Flow SCFM	Element type	Part number
F701	3/4"	Metal	32 oz	95	0.01 micron	**F701-06E3P**
	3/4"	Metal	32 oz	158	1.0 micron	**F701-06E7P**
	3/4"	Metal	100 oz	170	0.01 micron	**F701-06L3P**
	3/4"	Metal	100 oz	285	1.0 micron	**F701-06L7P**
	1"	Metal	32 oz	95	0.01 micron	**F701-08E3P**
	1"	Metal	32 oz	158	1.0 micron	**F701-08E7P**
	1"	Metal	100 oz	170	0.01 micron	**F701-08L3P**
	1"	Metal	100 oz	285	1.0 micron	**F701-08L7P**

Most popular.

Parker Hannifin Corporation
Pneumatic Division
Richland, Michigan
www.parker.com/pneumatics

F701 - 32 oz. bowl (Hi-Flow)

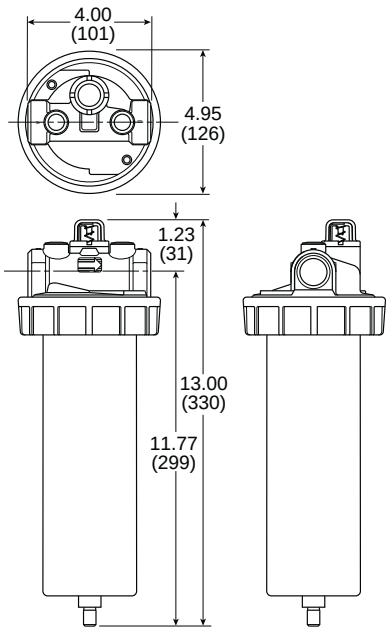

F701 - 100 oz. bowl (Hi-Flow)

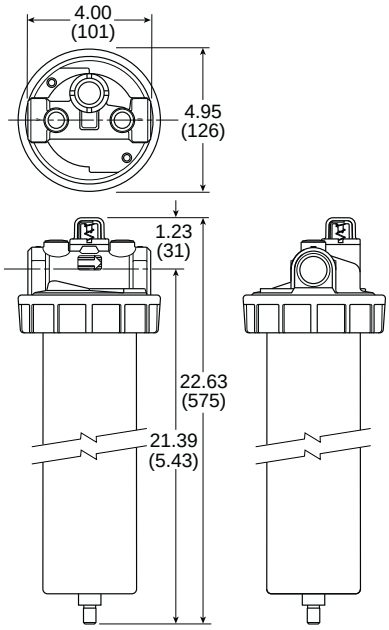

Service kits

Description		F701 (Hi-Flow)
Bowl kits	3/4, 1 inch (E) 32 oz	**BK603B**
	3/4, 1 inch (L) 100 oz	**BK603C**
DPI repair kit		**RK701P**
Drain kits –	Internal auto	**SA702MD**
	Manual	**SA600Y7-1**
Filter element kits –	0.01 micron, 3/4, 1 inch (E) 32 oz	**F701-C3-0773**
	0.01 micron, 3/4, 1 inch (E) 100 oz	**F701-C3-0774**
	1.0 micron, 3/4, 1 inch (E) 32 oz	**F701-C7-0773**
	1.0 micron, 3/4, 1 inch (E) 100 oz	**F701-C7-0773**
Mounting bracket kits –	3/4" unit	**SA200AW57**
	1" unit	**SA200CW57**

Parker Hannifin Corporation
Pneumatic Division
Richland, Michigan
www.parker.com/pneumatics

35F, 43F General Industrial Coalescing Filters

- Heavy-duty cast aluminum housings to withstand operating pressures up to 250 PSIG
- Differential pressure indicator to eliminate the guesswork of element replacement
- Unique drain mounting plate design offers a trouble-free method for interchanging and installing external drains
- 35F: 1-1/2" & 2" ports (NPT & BSPP)
- 43F: 3" ports (NPT & BSPP)

35F

43F

Material specifications

Description		35F, 43F (Hi-Flow)
Baffle		Plated steel
Body		Aluminum
Bowl		Aluminum
Deflector		Plated steel
Filter element	0.01 & 1.0 micron	Borosilicate cloth
	Adsorber	Activated carbon
Seals		Fluorocarbon
Stud		Plated steel

Operating information

		35F (Hi-Flow)	43F (Hi-Flow)
Operating pressure:	With DP gauge & without DPI	250 PSIG (17.2 bar)	250 PSIG (17.2 bar)
	With DPI	150 PSIG (10.3 bar)	150 PSIG (10.3 bar)
Operating temperature:		32°F to 150°F (0°C to 65.5°C)	32°F to 150°F (0°C to 65.5°C)

Coalescing Filters

	Port size	Bowl type	Flow SCFM	Element type	Part number (NPT) Automatic drain
35F	1-1/2	Metal	710	0.01 micron	**35F77EAP**
	1-1/2	Metal	710	1.0 micron	**35F77HAP**
	2	Metal	710	0.01 micron	**35F87EAP**
	2	Metal	710	1.0 micron	**35F87HAP**
43F	3	Metal	1770	0.01 micron	**43FN7EAP**
	3	Metal	1770	1.0 micron	**43FN7HAP**

Most popular.

Parker Hannifin Corporation
Pneumatic Division
Richland, Michigan
www.parker.com/pneumatics

35F (Hi-Flow)

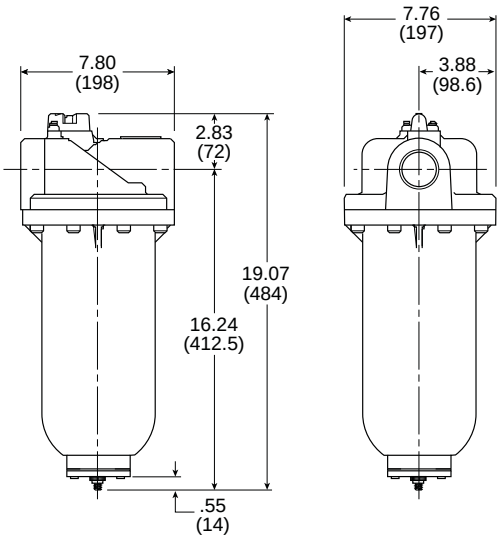

43F (Hi-Flow)

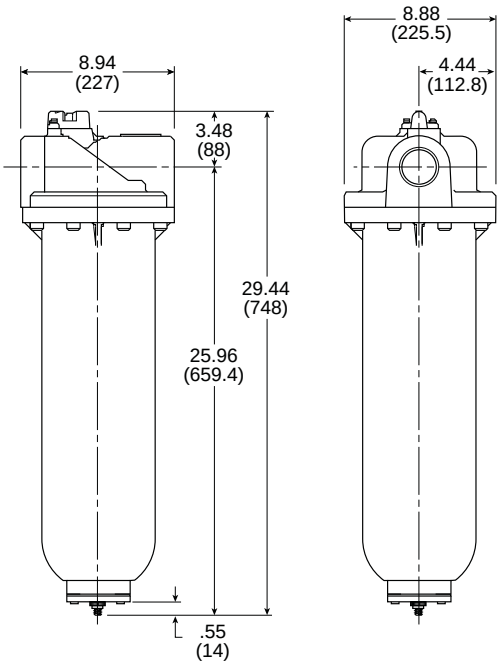

Service kits

Description		35F (Hi-Flow)	43F (Hi-Flow)
DPI replacement kit		**DP2-02-001**	**DP2-02-001**
DPI cap	Pressures over 150 PSIG	**GRP-95-022**	**GRP-95-022**
DP gauge		**DP3-01-000**	**DP3-01-000**
Automatic float drain kit	Auto internal drain 1/8"	**P32KA00DA**	**P32KA00DA**
Manual drain kit	with 1/2" drain plate	**GRP-95-392**	**GRP-95-392**
Drain plate kit	1/2 NPT tapped port	**GRP-95-393**	**GRP-95-393**
Filter element kit –	0.01 micron	**MTP-95-502**	**MTP-95-562**
	1.0 micron	**MSP-95-502**	**MSP-95-876**
	Adsorber	**MXP-95-502**	**MXP-95-565**

Parker Hannifin Corporation
Pneumatic Division
Richland, Michigan
www.parker.com/pneumatics

P3TF Series Flanged Filters

- No tie rod element design
- Pleated element technology
- New high efficiency drainage layer
- Designed in accordance with ASME and CRN
- Connection sizes: 4 inch & 6 inch flange
- Acrylic polyurethane coating for corrosion protection

P3TF Series

Material specifications

Baffle		Plated steel
Body		Steel
Deflector		Plated steel
Filter element	0.01 & 1.0 micron	Borosilicate cloth
Seals		Fluorocarbon
Stud		Plated steel

Operating information

	P3TF Series
Operating Pressure:	232 PSIG (16 bar)
Operating Temperature:	35°F to 212°F (1.5°C to 100°C)

Inlet air pressure correction

For pressures above 232 PSIG (16 bar), use manual drain.

PSI	15	29	44	58	73	87	100	116	131	145	160	174	189	203	218	232	247	261	275	290
bar	1	2	3	4	5	6	7	8	9	10	11	12	13	14	15	16	17	18	19	20
Factor	0.38	0.53	0.65	0.76	0.85	0.93	1.00	1.07	1.13	1.19	1.25	1.31	1.36	1.41	1.46	1.51	1.56	1.60	1.65	1.70

Flanged filters

		Port size	Flow SCFM	Number of elements	Part number
P3TF		4" Flange	2755	4	**P3TFAFFD2AN**
		4" Flange	2755	4	**P3TFAFFQ2AN**
		6" Flange	4132	6	**P3TFAFGD3AN**
		6" Flange	4132	6	**P3TFAFGQ3AN**

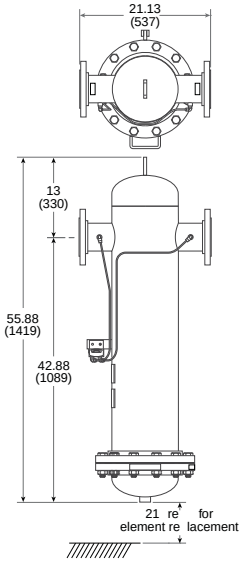

P3TFAFFD2AN & P3TFAFFQ2AN

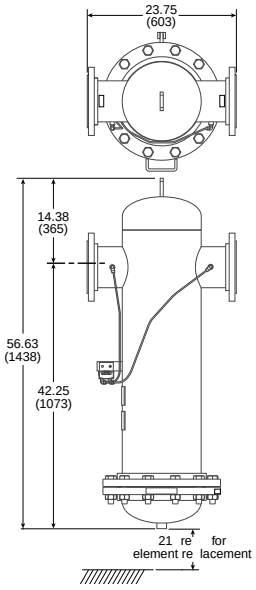

P3TFAFGD3AN & P3TFAFGQ3AN

Most popular.

Service kits

Description		Number required	P3TF Series
DP gauge replacement kit			**DPG-Kit**
Drain kit - 1/2" NPT			**HDF-120-NPT-A**
Filter element kit –	0.01 micron	4 or 6	**PSY1035002**
	1.0 micron	4 or 6	**PSY1035001**

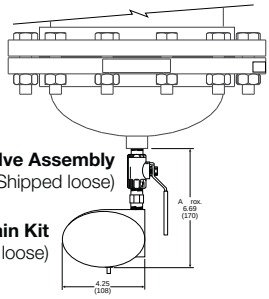

Parker Hannifin Corporation
Pneumatic Division
Richland, Michigan
www.parker.com/pneumatics

R119 General Industrial Regulators

- Rugged design for the most demanding applications
- Ideal for those installations calling for constant pressure with wide variation in flow
- Diaphragm operated design with balanced poppet design for quick and accurate regulation
- Secondary aspiration plus balanced poppet provides quick response and accurate pressure regulation
- Heavy duty tee handle adjustment
- Reverse flow version available
- Panel mount version available

R119

Operating information

Supply pressure rating:	300 PSIG (20.4 bar)
Reduced pressure range:	2 to 125 PSIG (0.15 to 8.5 bar)
Temperature rating:	40°F to 125°F (4.4°C to 52°C)

R119 Standard Regulators

Port size	Flow (SCFM)	Part number (NPT), Relieving	
		Without gauge	With 125 PSI gauge
1/4"	100	**R119-02C/M2**	**R119-02CG/M2**
3/8"	110	**R119-03C/M2**	**R119-03CG/M2**
1/2"	150	**R119-04C/M2**	**R119-04CG/M2**

Material specifications

Description	R119
Adjusting screw, springs	Steel
Body, spring cage	Zinc
Bottom plug	Brass
Seals	Buna N

⚠ WARNING
Product rupture can cause serious injury.
Do not connect regulator to bottled gas.
Do not exceed maximum primary pressure rating.

CAUTION:
REGULATOR PRESSURE ADJUSTMENT –
The working range of knob adjustment is designed to permit outlet pressures within their full range. Pressure adjustment beyond this range is also possible because the knob is not a limiting device. This is a common characteristic of most industrial regulators, and limiting devices may be obtained only by special design. For best performance, regulated pressure should always be set by increasing the pressure up to the desired setting.

☐ Most popular.

Parker Hannifin Corporation
Pneumatic Division
Richland, Michigan
www.parker.com/pneumatics

Dimensions

R119 Regulator - Standard

A	B	C	D	E	N
R119-02C, R119-03C					
3.00 (76)	1.38 (35)	5.29 (134)	2.74 (70.5)	6.67 (169)	.90 (24)
R119-04C					
3.56 (90)	1.56 (40)	5.34 (136)	3.25 (83)	6.90 (175)	1.45 (37)

inches (mm)

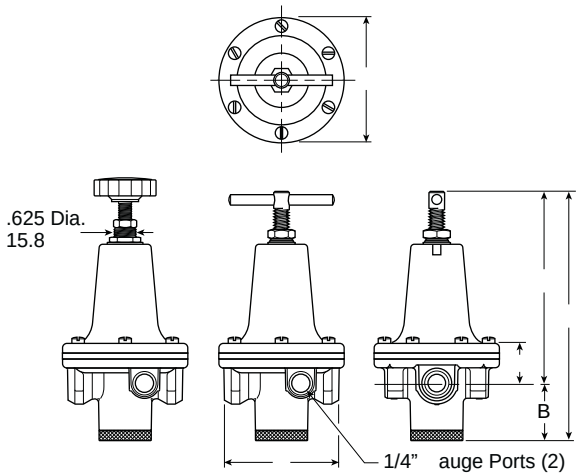

Service kits

Description			Part number
Gauges –	50mm (2") round 1/4" center back mount	2" dial size, 1/4" back connection, 0 to 60 PSIG (0 to 400 kPa)	**K4520N14060**
		2" dial size, 1/4" back connection, 0 to 160 PSIG (0 to 1100 kPa)	**K4520N14160**
		2" dial size, 1/4" back connection, 0 to 300 PSIG (0 to 2068 kPa)	**K4520N14300**
	44mm (1-3/4") digital round 1/4" center back mount	0-160 PSIG / 0-11 bar / 0-1.1 MPa	**K4517N14160**
Mounting bracket kits –		1/4", 3/8"	**SA15Y57**
		1/2"	**18A57**
Panel mount conversion kits –		1/4", 3/8"	**4202**
		1/2"	**4204**
Repair kits –		Non-relieving diaphragm, valve assembly (1/4", 3/8"; All PSIG)	**RK118Y**
		Relieving diaphragm, valve assembly (1/4", 3/8"; All PSIG)	**RK119Y**
		Non-relieving diaphragm, valve assembly (1/2"; 25, 60, 125 PSIG)	**RK118A**
		Non-relieving diaphragm, valve assembly (1/2"; 250 PSIG)	**RK118A250**
		Relieving diaphragm, valve assembly (1/2"; 25, 60, 125 PSIG)	**RK119A**
		Relieving diaphragm, valve assembly (1/2"; 250 PSIG)	**RK119A250**
Spring cage & t-handle kit		1/4", 3/8"	**RKC119Y**
Spring cage & insert only kit		1/2"	**SAC18A3/BK**

For fluorocarbon repair kits, add X64 to kit number suffix.

Parker Hannifin Corporation
Pneumatic Division
Richland, Michigan
www.parker.com/pneumatics

R119 General Industrial Regulators

R119

R119

- High flow performance featuring rugged design for the most demanding applications
- Diaphragm operated design with balanced poppet design for quick and accurate regulation
- Heavy duty tee handle adjustment
- Reverse flow version available

R119 Hi-Flow Regulators

Port size	Gauge	Flow (SCFM) R119	Part number (NPT), Relieving R119
3/4"	No	300	**R119-06C/M2**
1"	No	400	**R119-08C/M2**
1-1/4"	No	500	**R119-10C/M2**
1-1/2"	No	500	**R119-12C/M2**
3/4"	125 PSI	300	**R119-06CG/M2**
1"	125 PSI	400	**R119-08CG/M2**
1-1/4"	125 PSI	500	**R119-10CG/M2**
1-1/2"	125 PSI	500	**R119-12CG/M2**

Operating information

Pressure rating, maximum:	300 PSIG (20.4 bar)
Reduced pressure range:	2 to 125 PSIG 0.15 to 8.5 bar)
Temperature rating:	40°F to 125°F (4.4°C to 52°C)

Material specifications

Description	R119
Adjusting screw	Steel
Body	Zinc
Bottom plug, inner valve	Brass
Seals	Buna N
Springs – poppet & control	Steels

Service kits

Gauges –		60 PSIG (0 to 4.1 bar)	**K4520N14060**
	50mm (2") round 1/4" center back mount	160 PSIG (0 to 11.0 bar)	**K4520N14160**
		300 PSIG (0 to 20.0 bar)	**K4520N14300**
	44mm (1-3/4") digital round 1/4" center back mount	0-160 PSIG / 0-11 bar / 0-1.1 MPa	**K4517N14160**
Mounting bracket kit			**18B57**
Repair kits –		Non-relieving (1-1/4", 1-1/2")	**RK118B**
		Relieving (3/4", 1")	**RK119B**
		Relieving (1-1/4", 1-1/2")	**RK119D**

Dimensions

R119-06C, R119-08C

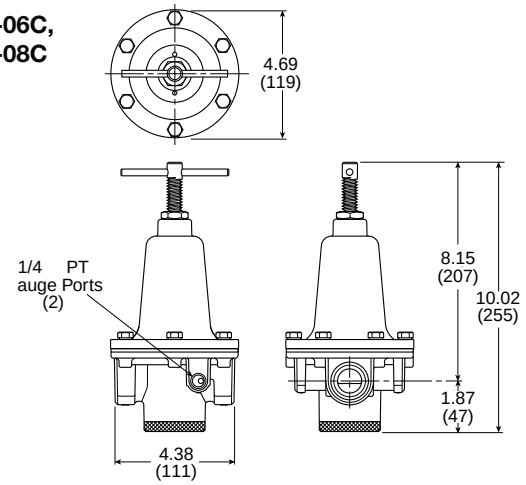

R119-10C, R119-12C

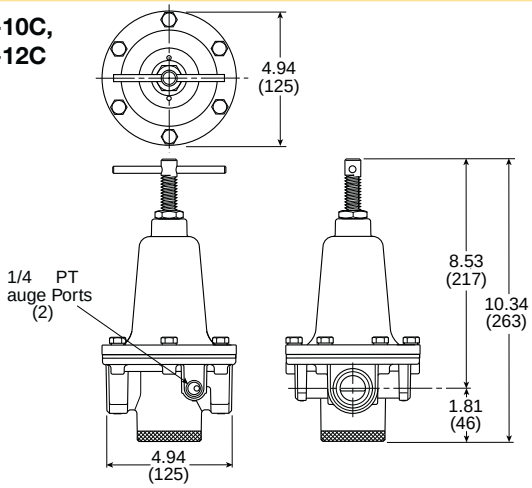

⚠ WARNING

Product rupture can cause serious injury.
Do not connect regulator to bottled gas.
Do not exceed maximum primary pressure rating.

Most popular.

CAUTION:
REGULATOR PRESSURE ADJUSTMENT –
The working range of knob adjustment is designed to permit outlet pressures within their full range. Pressure adjustment beyond this range is also possible because the knob is not a limiting device. This is a common characteristic of most industrial regulators, and limiting devices may be obtained only by special design. For best performance, regulated pressure should always be set by increasing the pressure up to the desired setting.

Parker Hannifin Corporation
Pneumatic Division
Richland, Michigan
www.parker.com/pneumatics

09R General Industrial Regulators

09R
- Piston design for reduced downtime
- High flow
- Balanced poppet for quick and accurate regulation
- Self relieving piston standard

09R

09R Hi-Flow Regulators

Port size	Gauge	Flow (SCFM) 09R	Part number (NPT), Relieving 09R
2"	No	1000	**09R813BA**

Operating information

Pressure rating, maximum:	300 PSIG (20.4 bar)
Secondary pressure range:	10 to 125 PSIG (0.7 to 8.6 bar) 10 to 180 PSIG (0.7 to 12.4 bar)
Temperature rating:	32°F to 150°F (0°C to 66°C)

Dimensions

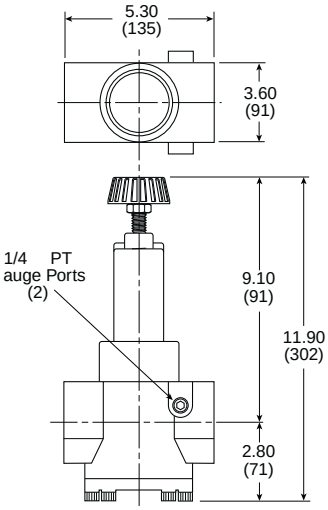

Material specifications

Description	09R
Adjusting screw	Steel
Body	Zinc
Bonnet	Aluminum
Piston	Plastic
Piston stem	Aluminum
Poppet assembly	Aluminum
Seals	Nitrile
Springs – poppet & control	Stainless

Service kits

Body service kit			**PS603P**
Gauges –	50mm (2") round 1/4" center back mount	160 PSIG (0 to 11.0 bar)	**K4520N14160**
		300 PSIG (0 to 20.0 bar)	**K4520N14300**
	44mm (1-3/4") digital round 1/4" center back mount	0-160 PSIG / 0-11 bar / 0-1.1 MPa	**K4517N14160**
Mounting bracket kit			**PS605P**
Repair kits –		Non-relieving	**PS604P**
		Relieving	**PS626P**
Springs –		0 to 125 PSIG	**PS602P**
		0 to 180 PSIG	**PS627**

⚠ WARNING
Product rupture can cause serious injury.
Do not connect regulator to bottled gas.
Do not exceed maximum primary pressure rating.

Most popular.

CAUTION:
REGULATOR PRESSURE ADJUSTMENT –
The working range of knob adjustment is designed to permit outlet pressures within their full range. Pressure adjustment beyond this range is also possible because the knob is not a limiting device. This is a common characteristic of most industrial regulators, and limiting devices may be obtained only by special design. For best performance, regulated pressure should always be set by increasing the pressure up to the desired setting.

Parker Hannifin Corporation
Pneumatic Division
Richland, Michigan
www.parker.com/pneumatics

R119 General Industrial Pilot Operated Regulators

- Adapted for control by a remote or distant small pilot regulator. Ideal for maximum capacity requirements in applications where units are not readily accessible
- High flow performance featuring rugged design for the most demanding applications
- Ideal for those installations calling for constant pressure with wide variation in flow
- Diaphragm operated design with balanced poppet and constant bleed pilot for quick and accurate regulation.
- Secondary aspiration plus balanced poppet provides quick response and accurate pressure regulation
- Reverse flow available

R119

Operating information

Supply pressure rating:	300 PSIG (20.4 bar)
Reduced pressure range:	Adjustable to within 5 to 7 PSIG of Supply Pressure
Air Consumption:	Constant bleed from air pilot chamber: approx. 0.17 SCFM (10 SCFH)
Temperature rating:	40°F to 125°F (4.4°C to 52°C)

R119 Standard Regulators

Port size	Gauge	Flow (SCFM)	Part number (NPT), Relieving
1/4"	No	100	**R119-02J/M2**
3/8"	No	110	**R119-03J/M2**
1/2"	No	150	**R119-04J/M2**

Material specifications

Description	R119
Body, ring, top plate	Zinc
Bottom plug	Nylon
Innervalve	Brass
Seals	Buna N

⚠ WARNING
Product rupture can cause serious injury.
Do not connect regulator to bottled gas.
Do not exceed maximum primary pressure rating.

CAUTION:
REGULATOR PRESSURE ADJUSTMENT –
The working range of knob adjustment is designed to permit outlet pressures within their full range. Pressure adjustment beyond this range is also possible because the knob is not a limiting device. This is a common characteristic of most industrial regulators, and limiting devices may be obtained only by special design. For best performance, regulated pressure should always be set by increasing the pressure up to the desired setting.

☐ Most popular.

Parker Hannifin Corporation
Pneumatic Division
Richland, Michigan
www.parker.com/pneumatics

Dimensions

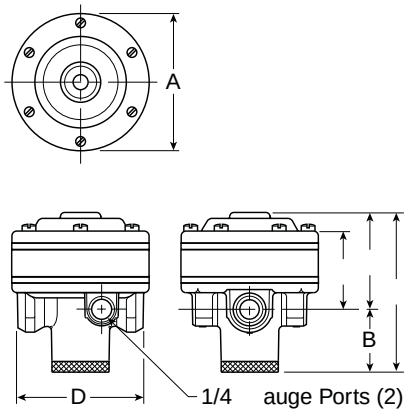

R119 Regulator - Pilot Operated

A	B	C	D	E	N
R119-02J, R119-03J					
3.00 (76)	1.38 (35)	1.98 (50)	2.74 (70)	3.55 (90)	1.57 (40)
R119-04J					
3.56 (90)	1.56 (40)	2.33 (59)	3.25 (83)	3.90 (99)	1.91 (49)

inches (mm)

Service kits

Description			Part number
Gauges –	50mm (2") round 1/4" center back mount	0 to 60 PSIG (0 to 400 kPa)	**K4520N14060**
		0 to 160 PSIG (0 to 1100 kPa)	**K4520N14160**
		0 to 300 PSIG (0 to 2068 kPa)	**K4520N14300**
	44mm (1-3/4") digital round 1/4" center back mount	0-160 PSIG / 0-11 bar / 0-1.1 MPa	**K4517N14160**
Repair kits –		Non-relieving diaphragm, valve assembly (1/2")	**RK118X20A**
		Non-relieving diaphragm, valve assembly (1/4", 3/8")	**RK118X20Y**
		Relieving diaphragm, valve assembly (1/2")	**RK119X20A**
		Relieving diaphragm, valve assembly (1/4," 3/8")	**RK119X20Y**

For fluorocarbon repair kits, add X64 to kit number suffix.
For Non-Bleed Pilot Repair Kits, add X71 to Kit Number suffix.Specifications

Parker Hannifin Corporation
Pneumatic Division
Richland, Michigan
www.parker.com/pneumatics

R119 General Industrial Pilot Operated Regulators

- Adapted for control by a remote or distant small pilot regulator. Ideal for maximum capacity requirements in applications where units are not readily accessible
- High flow performance featuring rugged design for the most demanding applications
- Ideal for those installations calling for constant pressure with wide variation in flow

R119 (06-12)

R119 (16-20)

Operating information

	R119-06J R119-08J R119-10J R119-12J	R119-16J R119-20J
Pressure rating, maximum:	300 PSIG (17.2 bar)	300 PSIG (17.2 bar)
Temperature rating:	40°F to 125°F (4.4°C to 52°C)	40°F to 120°F (4.4°C to 48.9°C)
Flow capacity SCFM:	3/4"; 300 1"; 300 1-1/4"; 500 1-1/2"; 500	2"; 1800 2-1/2"; 1800

R119 Pilot Operated Regulators

Port size	Gauge	Part number (NPT), relieving R119-06J, R119-08J, R119-10J, R119-12J 0-125 PSIG reduced pressure	R119-16J, R119-20J
3/4"	No	**R119-06J/M2**	
1"	No	**R119-08J/M2**	
1-1/4"	No	**R119-10J/M2**	
1-1/2"	No	**R119-12J/M2**	
2"	No		**R119-16J**
2-1/2"	No		**R119-20J**

Material specifications

Description	R119-06J, R119-08J, R119-10J, R119-12J	R119-16J, R119-20J
Body		Aluminum
Body, ring, top plate	Zinc	
Bottom plug, inner valve	Brass	Brass & Stainless
Piston		Aluminum
Seals	Buna N	Buna N

⚠ WARNING
Product rupture can cause serious injury.
Do not connect regulator to bottled gas.
Do not exceed maximum primary pressure rating.

CAUTION:
REGULATOR PRESSURE ADJUSTMENT –
The working range of knob adjustment is designed to permit outlet pressures within their full range. Pressure adjustment beyond this range is also possible because the knob is not a limiting device. This is a common characteristic of most industrial regulators, and limiting devices may be obtained only by special design. For best performance, regulated pressure should always be set by increasing the pressure up to the desired setting.

☐ Most popular.

Parker Hannifin Corporation
Pneumatic Division
Richland, Michigan
www.parker.com/pneumatics

R119-06J, R119-08J

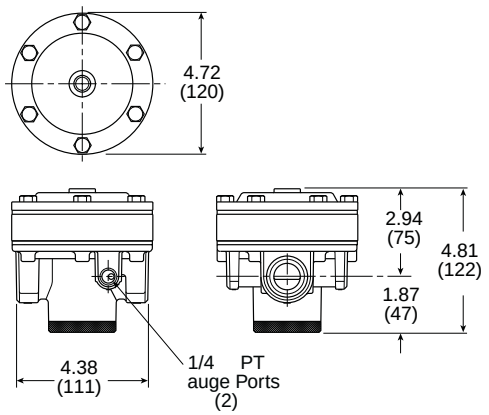

R119-10J, R119-12J

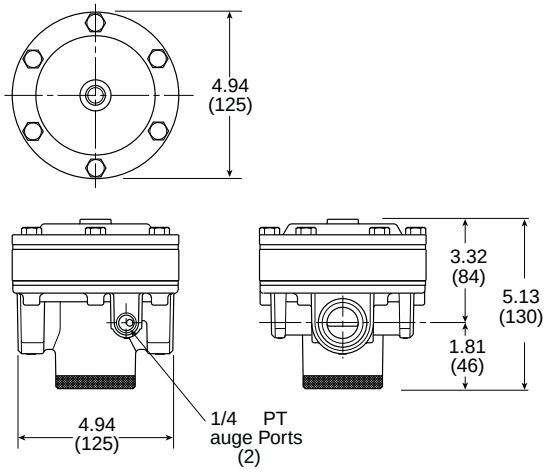

R119-16J, R119-20J

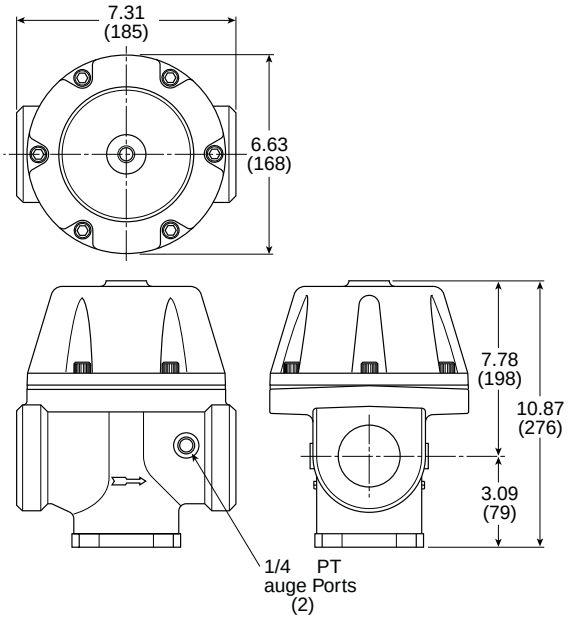

Service kits

		R119-06J, R119-08J, R119-10J, R119-12J	R119-16J, R119-20J
Gauges – 50mm (2") round 1/4" center back mount	60 PSIG (0 to 4.1 bar)	**K4520N14060**	**K4520N14060**
	160 PSIG (0 to 11.0 bar)	**K4520N14160**	**K4520N14160**
	300 PSIG (0 to 20.0 bar)	**K4520N14300**	**K4520N14300**
44mm (1-3/4") digital round 1/4" center back mount	0-160 PSIG / 0-11 bar / 0-1.1 MPa	**K4517N14160**	**K4517N14160**
Mounting bracket kit			
Repair kits	Piston type regulation (2", 2-1/2")		**RK119G**
Non-relieving diaphragm –	Valve assembly (3/4", 1")	**RK118X20B**	
	Valve assembly (1-1/4", 1-1/2")	**RK118X20D**	
Relieving diaphragm –	Valve assembly (3/4", 1")	**RK119X20B**	
	Valve assembly (1-1/4", 1-1/2")	**RK119X20D**	
Repair kits	Relieving		

Parker Hannifin Corporation
Pneumatic Division
Richland, Michigan
www.parker.com/pneumatics

L606 General Industrial Mist Lubricators

- Metal bowl with sight gauge - standard
- Polycarbonate sight dome
- Bowl can be filled while air line is under pressure
- Proportional oil delivery over a wide range of air flows
- Large capacity bowl
- Optional high capacity bowl(s) available
- Precision needle valve assures repeatable oil delivery and provides simple adjustment of delivery rate
- 3/4", 1", 1-1/4" & 1-1/2" ports (NPT & BSPP)

L606 3/4" & 1"

L606 1-1/4" & 1-1/2"

Material specifications

Body		Zinc
Bowl	(E) 32 oz	Aluminum
	(G) 64 oz.	Aluminum with polycarbonate sight gauge
	(W) 16 oz	Zinc with nylon sight gauge
Seals		Buna N

Operating information

Operating pressure:	Aluminum bowl (E) 32 oz.	0 to 300 PSIG (0 to 20.4 bar)
	Aluminum (G) 64 oz.	0 to 150 PSIG (0 to 10.2 bar)
	Zinc (W) 16 oz.	0 to 250 PSIG (0 to 17.2 bar)
Operating temperature:	Aluminum bowl (E) 32 oz.	40°F to 150°F (4.4°C to 65.6°C)
	Aluminum (G) 64 oz.	40°F to 125°F (4.4°C to 52°C)
	Zinc (W) 16 oz.	40°F to 150°F (4.4°C to 65.6°C)
Suggested lubricant:		F442 oil

Petroleum based oil of 100 to 200 SSU viscosity at 100°F (38°C) and an aniline point greater than 200°F (93°C)

(DO NOT USE OILS WITH ADDITIVES, COMPOUNDED OILS CONTAINING SOLVENTS, GRAPHITE, DETERGENTS, OR SYNTHETIC OILS.)

L606 Lubricators

Port size	Bowl type	Bowl capacity	Drain	Flow SCFM	Part number NPT	Part number BSPP
3/4"	Zinc / Sight gauge	16 oz	Yes	325	**L606-06W**	**L606G06W**
3/4"	Aluminum	32 oz	Yes	325	**L606-06E**	**L606G06E**
3/4"	Aluminum / Sight gauge	64 oz	None	325	**L606-06G**	**L606G06G**
1"	Zinc / Sight gauge	16 oz	Yes	350	**L606-08W**	**L606G08W**
1"	Aluminum	32 oz	Yes	350	**L606-08E**	**L606G08E**
1"	Aluminum / Sight gauge	64 oz	None	350	**L606-08G**	**L606G08G**
1-1/4"	Zinc / Sight gauge	16 oz	Yes	325	**L606-10W**	**L606G10W**
1-1/4"	Aluminum	32 oz	Yes	325	**L606-10E**	**L606G10E**
1-1/4"	Aluminum / Sight gauge	64 oz	None	325	**L606-10G**	**L606G10G**
1-1/2"	Zinc / Sight gauge	16 oz	Yes	400	**L606-12W**	**L606G12W**
1-1/2"	Aluminum	32 oz	Yes	400	**L606-12E**	**L606G12E**
1-1/2"	Aluminum / Sight gauge	64 oz	None	400	**L606-12G**	**L606G12G**

Most popular.

Parker Hannifin Corporation
Pneumatic Division
Richland, Michigan
www.parker.com/pneumatics

L606 - 3/4" and 1"

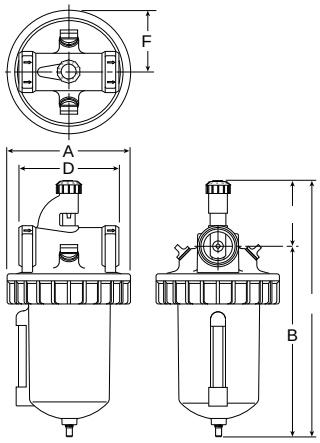

W & E size bowl

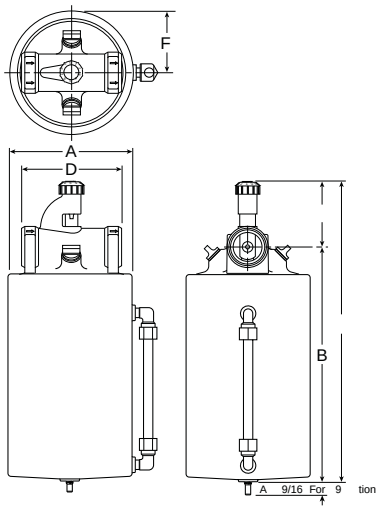

G size bowl

A	B	C	D	E	F
L606-06W, L606-08W					
4.97 (126)	7.25 (184)	2.63 (66.7)	4.06 (103)	9.88 (251)	2.48 (63.1)
L606-06E, L606-08E					
4.97 (126)	10.75 (273)	2.63 (66.7)	4.06 (103)	13.38 (340)	2.48 (63.1)
L606-06G, L606-08G					
5.00 (127)	9.40 (239)	2.62 (66)	4.06 (103)	12.02 (305)	2.50 (64)

inches (mm)

L606 - 1-1/4" and 1-1/2"

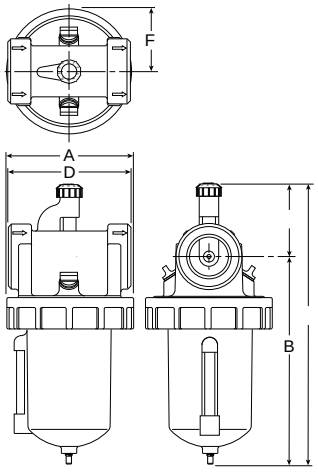

W & E size bowl

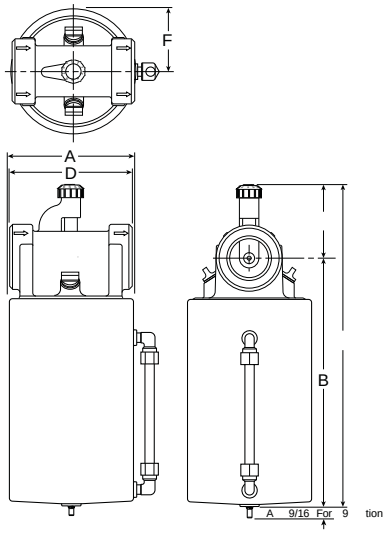

G size bowl

A	B	C	D	E	F
L606-10W, L606-12W					
4.97 (126)	7.63 (194)	2.84 (72.2)	4.81 (122)	10.47 (266)	2.48 (63.1)
L606-10E, L606-12E					
4.97 (126)	11.13 (283)	2.84 (72.2)	4.81 (122)	13.97 (255)	2.48 (63.1)
L606-10G, L606-12G					
5.00 (127)	7.99 (203)	2.84 (72.2)	4.81 (122)	12.80 (325)	2.50 (64)

inches (mm)

Service kits

Description		L606
Adjusting knob		**606Y72**
Bowl kits –	Aluminum (e) 32 oz	**BK603B**
	Aluminum (g) 64 oz	**BK606X30B**
	Zinc / sight gauge (w) 16 oz	**BK609WB**
Button head fill fitting (m14 male thread)		**L606C14**
Dip tube kit		**DTK606**
Drip spout kit		**RK606SY**
Mounting brackets –	3/4 Inch units (2 required per unit)	**SA200AW57**
	1 Inch units (2 required per unit)	**SA200CW57**
Oil –	1 Quart	**F442001**
	2 Quart case	**F442003**
	4 Gallon case	**F442005**
Repair kits –	Needle valve assembly (all)	**RK606Y**
	Sight gauge bowl repair kit (w)	**RKB605WB**
	Sight gauge bowl repair kit (g)	**RKB606X30B**

Parker Hannifin Corporation
Pneumatic Division
Richland, Michigan
www.parker.com/pneumatics

09L General Industrial Mist Lubricators

- Metal bowl with sight gauge and manual drain – standard
- Transparent sight dome for 360° visibility
- Bowl can be filled while air line is under pressure
- Proportional oil delivery over a wide range of air flows

Material specifications

Body	Zinc alloy, die cast

Operating information

Pressure rating:	0 to 150 PSIG (0 to 10.3 bar)
Temperature rating:	32°F to 150°F (0°C to 66°C)
Suggested lubricant:	F442 oil

Petroleum based oil of 100 to 200 SSU viscosity at 100°F (38°C) and an aniline point greater than 200°F (93°C)

(DO NOT USE OILS WITH ADDITIVES, COMPOUNDED OILS CONTAINING SOLVENTS, GRAPHITE, DETERGENTS, OR SYNTHETIC OILS.)

09L Lubricator

Port size	Bowl type	Bowl capacity	Flow SCFM	Part number (NPT)
2"	Metal / Sight gauge	1 quart	1000	**09L84BA**
2"	Metal / Sight gauge	3 quart	1000	**09L8PBA**

* Engineering level will be added at factory.

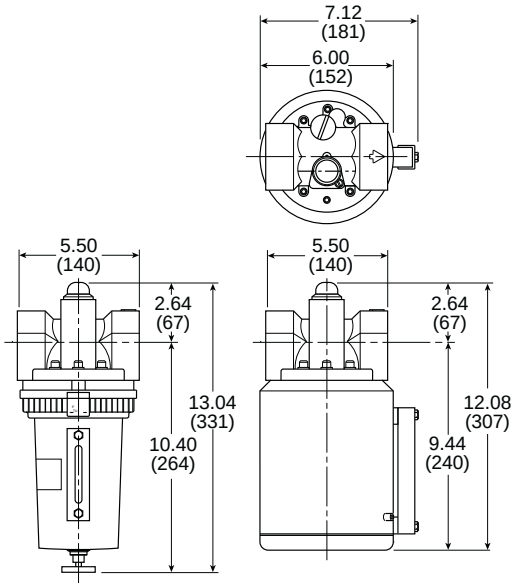

1 uart Bowl 3 uart Bowl

Service kits

Bowl kit	Metal bowl, sight gauge / twist drain	**PS612P***
Fill cap kit		**PS610P**
Lubricator service kit		**PS607P**
Oil	1 Quart	**F442001**
	12 Quart case	**F442003**
	4 Gallon case	**F442005**
Sight dome kit		**PS613P**

* 1 quart bowl.

Most popular.

Parker Hannifin Corporation
Pneumatic Division
Richland, Michigan
www.parker.com/pneumatics

C628 Standard General Industrial Combinations

- Regulator can be mounted with knob in up or down position
- 40 micron filter element
- Gauges included on combinations
- Manual twist drain
- Relieving regulator

C628 Standard Combinations

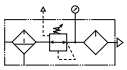

Port size	Bowl type	Bowl capacity	Element type	Part number
3/4"	Metal / Sight gauge	16 oz	40 micron	**C628-06FRLWJCW**
3/4"	Metal / Without sight gauge	32 oz	40 micron	**C628-06FRLEJCE**
1"	Metal / Sight gauge	16 oz	40 micron	**C628-08FRLWJCW**
1"	Metal / Without sight gauge	32 oz	40 micron	**C628-08FRLEJCE**
1-1/4"	Metal / Sight gauge	16 oz	40 micron	**C628-10FRLWJCW**
1-1/4"	Metal / Without sight gauge	32 oz	40 micron	**C628-10FRLEJCE**
1-1/2"	Metal / Sight gauge	16 oz	40 micron	**C628-12FRLWJCW**
1-1/2"	Metal / Without sight gauge	32 oz	40 micron	**C628-12FRLEJCE**

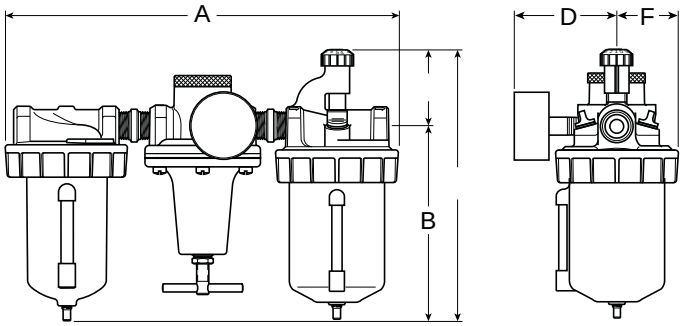

A	B	C	D	E	F
C628-06FRL, C628-08FRL					
15.75 (400)	7.75 (197)	2.63 (67)	3.52 (89)	13.00 (330)	2.48 (63)
C628-10FRL, C628-12FRL					
16.50 (419)	8.13 (206)	2.84 (72)	3.86 (98)	14.13 (359)	2.64 (67)

Inches (mm)
- All dimensions nominal.

⚠ WARNING
Product rupture can cause serious injury.
Do not connect regulator to bottled gas.
Do not exceed maximum primary pressure rating.

CAUTION:
REGULATOR PRESSURE ADJUSTMENT –
The working range of knob adjustment is designed to permit outlet pressures within their full range. Pressure adjustment beyond this range is also possible because the knob is not a limiting device. This is a common characteristic of most industrial regulators, and limiting devices may be obtained only by special design. For best performance, regulated pressure should always be set by increasing the pressure up to the desired setting.

Most popular.

Parker Hannifin Corporation
Pneumatic Division
Richland, Michigan
www.parker.com/pneumatics

Stainless Steel Filters

The range of Stainless Steel FRLs are ideal for use in the food industry, the petrochemical or process industries or any application in a particularly harsh or aggressive environment.

- Stainless steel construction handles most corrosive environments
- Fluorocarbon seals standard
- Meets NACE specifications MR-01-75/ISO 15156
- 1/8" female threaded drain

Operating information

		PF504	PF10	PF501	PF11
Operating pressure:	Twist drain	0 to 300 PSIG (0 to 20.7 bar)	0 to 300 PSIG (0 to 20.7 bar)	0 to 300 PSIG (0 to 20.7 bar)	0 to 300 PSIG (0 to 20.7 bar)
	Auto drain	10 to 175 PSIG (0 to 12 bar)	10 to 175 PSIG (0 to 12 bar)	10 to 175 PSIG (0 to 12 bar)	10 to 175 PSIG (0 to 12 bar)
Operating temperature:	Twist drain	0°F to 180°F (-18°C to 82°C)	0°F to 180°F (-18°C to 82°C)	0°F to 180°F (-18°C to 82°C)	0°F to 180°F (-18°C to 82°C)
	Auto drain	32°F to 150°F (0°C to 66°C)	32°F to 150°F (0°C to 66°C)	32°F to 150°F (0°C to 66°C)	32°F to 150°F (0°C to 66°C)
Flow / SCFM (dm^3/s):		23 (10.85)	70 (33.04)	16 (7.55)	45 (21.24)

Particulate Filters

Port Size	Flow SCFM (dm^3/s)	Standard filtration	Part number manual drain	Part number auto drain
1/4	23 (10.85)	20 µ	**PF504-02DHSS**	**PF504-02DHRSS**
1/2	70 (33.04)	40 µ	**PF10-04WJSS**	**PF10-04WJRSS**

Coalescing Filters

1/4	16 (7.55)	.3 µ	**PF501-02DHSS**	**PF501-02DHRSS**
1/2	45 (21.24)	.01 µ	**PF11-04WJSS**	**PF11-04WJRSS**

Service kits

Description		PF504	PF10	PF501	PF11
Drain kit -	automatic pulse	**RK504SY-SS**		**RK504SY-SS**	
	automatic float		**SA10MDSS**		**SA10MDSS**
	manual twist, small (old)	**SA600Y7-1SS**	**SA600Y7-1SS**	**SA600Y7-1SS**	
	manual twist, large (new)	**SAP05481**	**SAP05481**	**SAP05481**	
Filter element -	5 micron (particulate)	**EK504VY**	**EK55J**		
	20 micron (particulate)	**EK504Y**			
	40 micron (particulate)		**EK55G**		
	0.3 micron (coalescing)			**EK501H**	
	0.01 micron (coalescing)				**EKF71**
Pipe nipple		**616Y28-SS**	**616A28-SS**	**616Y28-SS**	**616A28-SS**

☐ Most popular.

Parker Hannifin Corporation
Pneumatic Division
Richland, Michigan
www.parker.com/pneumatics

PF504 / PF501

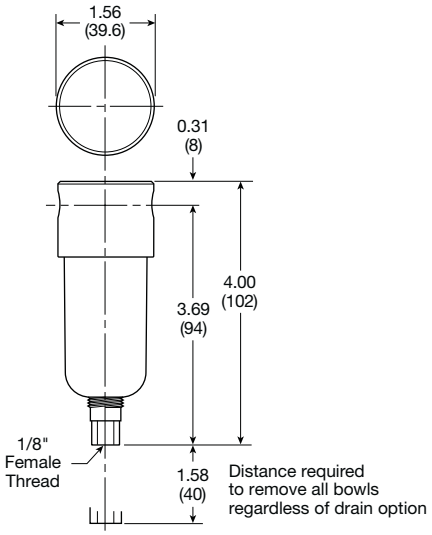

PF10 / PF11

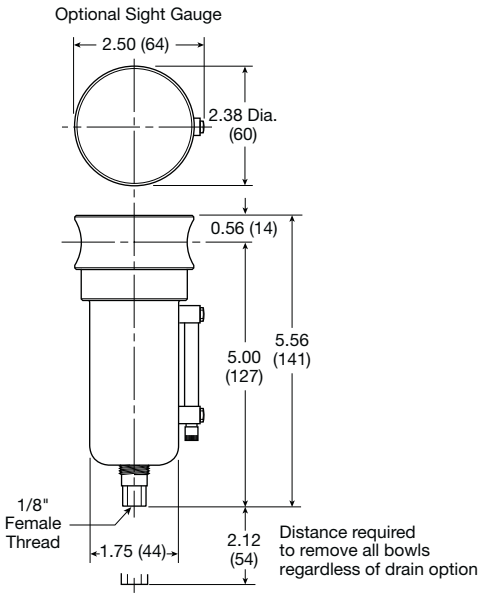

Specifications

Description	PF504	PF10	PF501	PF11
Filter rating	20 micron	40 micron	0.3 micron	0.01 micron
Port threads	1/4	1/2	1/4	1/2
Weight	0.6 lb. (0.27 kg)	1.9 lb. (0.85 kg)	0.6 lb. (0.27 kg)	1.9 lb. (0.85 kg)

Material specifications

Description	PF504	PF10	PF501	PF11
Body	316 stainless steel	316 stainless steel	316 stainless steel	316 stainless steel
Bowls	316 stainless steel	316 stainless steel	316 stainless steel	316 stainless steel
Deflector	Acetal	Acetal		
Drain	316 stainless steel	316 stainless steel	316 stainless steel	316 stainless steel
Element holder	Acetal	Acetal	Acetal	Acetal
Filter element	Polyethylene	Polyethylene	Borosilicate fiber	Borosilicate fiber
Seals	Fluorocarbon	Fluorocarbon	Fluorocarbon	Fluorocarbon
Sight gauge		Isoplast		Isoplast

Parker Hannifin Corporation
Pneumatic Division
Richland, Michigan
www.parker.com/pneumatics

Stainless Steel Regulators

The range of Stainless Steel FRLs are ideal for use in the food industry, the petrochemical or process industries or any application in a particularly harsh or aggressive environment.

- Stainless steel construction handles most corrosive environments
- Large diaphragm to valve area ratio for precise regulation and high flow capacity
- Meets NACE specifications MR-01-75/ISO 15156

⚠ WARNING
Product rupture can cause serious injury.
Do not connect regulator to bottled gas.
Do not exceed maximum primary pressure rating.

CAUTION:
REGULATOR PRESSURE ADJUSTMENT –
The working range of knob adjustment is designed to permit outlet pressures within their full range. Pressure adjustment beyond this range is also possible because the knob is not a limiting device. This is a common characteristic of most industrial regulators, and limiting devices may be obtained only by special design. For best performance, regulated pressure should always be set by increasing the pressure up to the desired setting.

Operating information

	PR354 & PR11	PR364 & PR10
Operating pressure:	300 PSIG Max (20.7 bar)	300 PSIG Max (20.7 bar)
Operating temperature:	0°F to 180°F (-18°C to 82°C)	0°F to 150°F (-18°C to 66°C)
Flow / SCFM (dm^3/s):	12 (5.66)	80 (37.76)

Regulators

Port size	Adjustment type	Flow SCFM (dm^3/s)	Part number 0 to 125 PSIG
1/4	Knob version	12 (5.66)	**PR364-02CSS**
1/4	All metal version	12 (5.66)	**PR354-02CSS**
1/2	Knob version	80 (37.76)	**PR10-04CSS**
1/2	T-handle version	80 (37.76)	**PR11-04CSS**

Service kits

Description		PR354	PR364	PR10	PR11
Bonnet Kit		**CKR354YSS**	**CKR364Y-1SS**	**CKR10YSS**	**CKR11YSS**
Gauge, stainless – 160 PSIG (0 to 1100 kPa)	1-1/2" Face	**K4515N14160SS**	**K4515N14160SS**		
	2" Face			**K4520N14160SS**	**K4520N14160SS**
Panel mount bracket (stainless)		**161X57-SS**	**161X57-SS**	**R10Y57-SS**	**R10Y57-SS**
Panel mount nut –	stainless	**R05X51-SS**	**R05X51-SS**	**R10X51-SS**	**R10X51-SS**
	plastic	**R05X51-P**	**R05X51-P**	**R10X51-P**	**R10X51-P**
Pipe nipple, 316 stainless steel		**616Y28-SS**	**616Y28-SS**	**616A28-SS**	**616A28-SS**
Service Kit –	relieving	**RKR364YSS**	**RKR364YSS**	**RKR10YSS**	**RKR10YSS**
	non-relieving	**RKR364KYSS**	**RKR364KYSS**	**RKR10KYSS**	**RKR10KYSS**
Springs –	0-25 PSIG range	**SPR-375-2-SS**	**SPR-375-2-SS**	**SPR-388-1-SS**	**SPR-388-1-SS**
	0-60 PSIG range	**SPR-376-1-SS**	**SPR-376-1-SS**	**SPR-389-1-SS**	**SPR-389-1-SS**
	0-125 PSIG range	**SPR-377-1-SS**	**SPR-377-1-SS**	**SPR-390-1-SS**	**SPR-390-1-SS**

☐ Most popular.

Parker Hannifin Corporation
Pneumatic Division
Richland, Michigan
www.parker.com/pneumatics

PR354

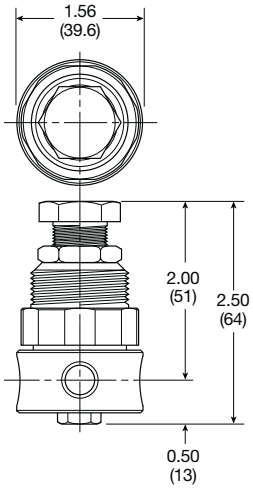

PR364

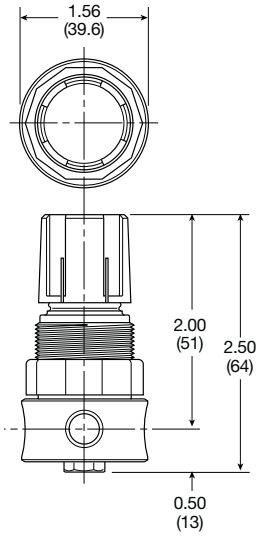

PR10

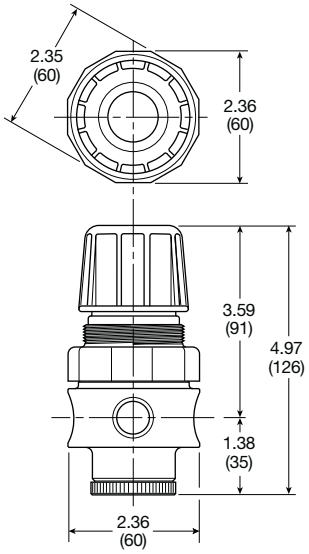

PR11

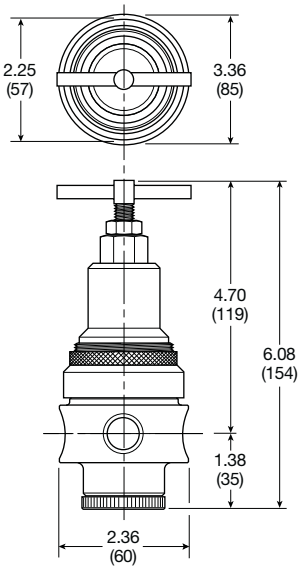

Specifications

Description	PR354	PR364	PR10	PR11
Gauge port	1/4	1/4	1/4	1/4
Operation	Fluorocarbon diaphragm	Fluorocarbon diaphragm	Fluorocarbon diaphragm	Fluorocarbon diaphragm
Port threads	1/4	1/4	1/2	1/2
Weight	0.5 lb. (0.23 kg)	0.5 lb. (0.23 kg)	1.79 lb. (0.81 kg)	1.79 lb. (0.81 kg)

Material specifications

Description	PR354	PR364	PR10	PR11
Adjustment mechanism / springs:	316 stainless steel	316 stainless steel	316 stainless steel	316 stainless steel
Adjusting knob	316 stainless steel	Polypropylene		
Body / poppet	316 stainless steel	316 stainless steel	316 stainless steel	316 stainless steel
Bonnet	316 stainless steel	Acetal	Acetal	316 stainless steel
Bottom plug	316 stainless steel	316 stainless steel	316 stainless steel	316 stainless steel
Seals	Fluorocarbon	Fluorocarbon	Fluorocarbon	Fluorocarbon

Parker Hannifin Corporation
Pneumatic Division
Richland, Michigan
www.parker.com/pneumatics

Stainless Steel Filter / Regulators

The range of Stainless Steel FRLs are ideal for use in the food industry, the petrochemical or process industries or any application in a particularly harsh or aggressive environment.

- Stainless steel construction handles most corrosive environments
- Large diaphragm to valve area ratio for precise regulation and high flow capacity
- Meets NACE specifications MR-01-75/ISO 15156

⚠ WARNING
Product rupture can cause serious injury.
Do not connect regulator to bottled gas.
Do not exceed maximum primary pressure rating.

CAUTION:
REGULATOR PRESSURE ADJUSTMENT –
The working range of knob adjustment is designed to permit outlet pressures within their full range. Pressure adjustment beyond this range is also possible because the knob is not a limiting device. This is a common characteristic of most industrial regulators, and limiting devices may be obtained only by special design. For best performance, regulated pressure should always be set by increasing the pressure up to the desired setting.

Operating information

	PB548 & PB558	PB11 & PB12
Operating pressure:	300 PSIG max (20.7 bar)	300 PSIG max (20.7 bar)
Operating temperature:	**PB548:** 0°F to 150°F (-18°C to 66°C) **PB558:** 0°F to 180°F (-18°C to 82°C)	**PB11:** 0°F to 150°F (-18°C to 66°C) **PB12:** 0°F to 180°F (-18°C to 82°C)
Flow / SCFM (dm^3/s):	12 (5.66)	72 (33.98)

Filter / Regulators

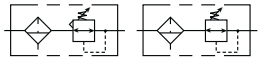

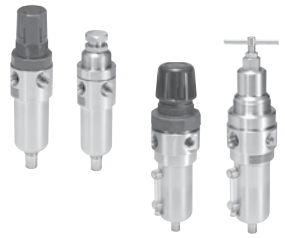

Port size	Adjustment type	Drain type	Flow SCFM (dm^3/s) ft/min@100 PSI	Part number 0 to 125 PSIG
1/4	Knob version	Manual twist	12 (5.66)	**PB548-02DHCSS**
1/4	All metal version	Manual twist	12 (5.66)	**PB558-02DHCSS**
1/2	Knob version	Manual twist	72 (33.98)	**PB11-04WJCSS**
1/2	Knob version	Auto float	72 (33.98)	**PB11-04WJCRSS**
1/2	T-handle version	Manual twist	72 (33.98)	**PB12-04WJCSS**
1/2	T-handle version	Auto float	72 (33.98)	**PB12-04WJCRSS**

Service kits

Description		PB548	PB558	PB11	PB12
Bonnet kit		**CKR364Y-1SS**	**CKR354YSS**	**CKR10YSS**	**CKR11YSS**
Drain kit -	automatic pulse	**RK504SY-SS**	**RK504SY-SS**		
	automatic float			**SA10MDSS**	**SA10MDSS**
	manual twist, small (old)	**SA600Y7-1SS**	**SA600Y7-1SS**	**SA600Y7-1SS**	**SA600Y7-1SS**
	manual twist, large (new)	**SAP05481**	**SAP05481**	**SAP05481**	**SAP05481**
Filter element kits particulate	5 micron	**EK504VY**	**EK504VY**	**EKF10VY**	**EKF10VY**
	20 micron	**EK504Y**	**EK504Y**		
	40 micron			**EKF10Y**	**EKF10Y**
Gauge, stainless 160 PSIG (0 to 1100 kPa)	1-1/2" Face	**K4515N14160SS**	**K4515N14160SS**		
	2" Face			**K4520N14160SS**	**K4520N14160SS**
Panel mount bracket (stainless)		**161X57-SS**	**161X57-SS**	**R10Y57-SS**	**R10Y57-SS**
Panel mount nut –	stainless	**R05X51-SS**	**R05X51-SS**	**R10X51-SS**	**R10X51-SS**
	plastic	**R05X51-P**	**R05X51-P**	**R10X51-P**	**R10X51-P**
Pipe nipple, 316 stainless steel		**616Y28-SS**	**616Y28-SS**	**616A28-SS**	**616A28-SS**
Service kit –	relieving	**RK549YSS**	**RK549YSS**	**RKR10YSS**	**RKR10YSS**
	non-relieving	**RK548YSS**	**RK548YSS**	**RKR10KYSS**	**RKR10KYSS**
Springs –	0-25 PSIG range	**SPR-375-2-SS**	**SPR-375-2-SS**		
	0-60 PSIG range	**SPR-376-1-SS**	**SPR-376-1-SS**	**SPR-388-1-SS**	**SPR-388-1-SS**
	0-125 PSIG range	**SPR-377-1-SS**	**SPR-377-1-SS**	**SPR-389-1-SS**	**SPR-389-1-SS**
	0-250 PSIG range			**SPR-390-1-SS**	**SPR-390-1-SS**

☐ Most popular.

Parker Hannifin Corporation
Pneumatic Division
Richland, Michigan
www.parker.com/pneumatics

PB548

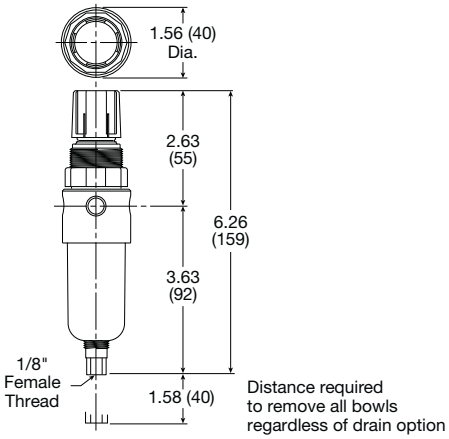

PB588

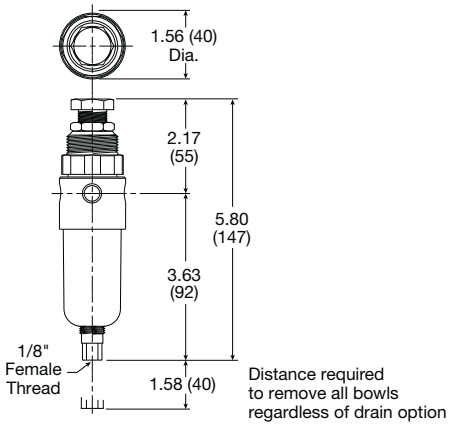

PB11

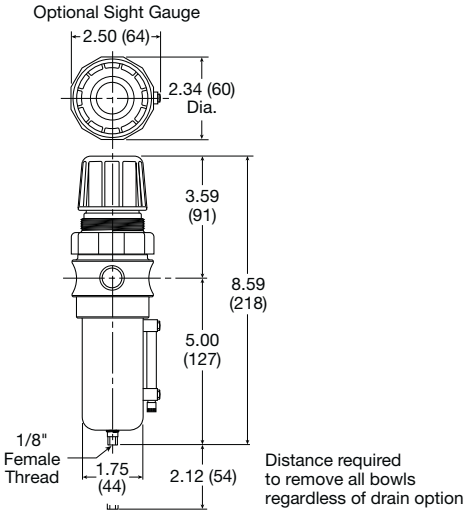

PB12

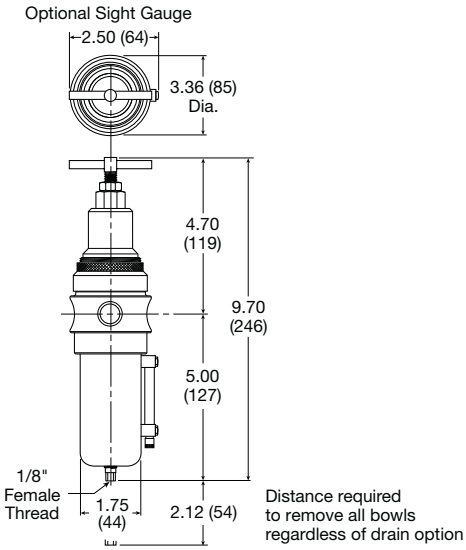

Specifications

Description	PB548	PB558	PB11	PB12
Filter rating	20 micron	20 micron	40 micron	40 micron
Gauge port	1/4	1/4	1/4	1/4
Operation	Fluorocarbon diaphragm	Fluorocarbon diaphragm	Fluorocarbon diaphragm	Fluorocarbon diaphragm
Port threads	1/4	1/4	1/2	1/2
Weight	0.6 lb. (0.27 kg)	0.6 lb. (0.27 kg)	2.42 lb. (1.09 kg)	2.42 lb. (1.09 kg)

Material specifications

Description	PB548	PB558	PB11	PB12
Adjustment mechanism / springs	316 stainless steel	316 stainless steel	316 stainless steel	316 stainless steel
Adjusting knob	Polypropylene	316 stainless steel	Acetal	316 stainless steel
Body / poppet	316 stainless steel	316 stainless steel	316 stainless steel	316 stainless steel
Bonnet	Acetal	316 stainless steel	Acetal	316 stainless steel
Bottom plug	316 stainless steel	316 stainless steel	316 stainless steel	316 stainless steel
Seals	Fluorocarbon	Fluorocarbon	Fluorocarbon	Fluorocarbon
Sight gauge			Isoplast	Isoplast

Parker Hannifin Corporation
Pneumatic Division
Richland, Michigan
www.parker.com/pneumatics

Stainless Steel Lubricators

The range of Stainless Steel FRLs are ideal for use in the food industry, the petrochemical or process industries or any application in a particularly harsh or aggressive environment.

- Stainless steel construction handles most corrosive environments
- Fluorocarbon seals standard
- Meets NACE specifications MR-01-75/ISO 15156
- 1/8" female threaded drain
- Fillable under pressure

Operating information

Operating pressure –	
no sight gauge	0 to 300 PSIG (0 to 20.7 bar)
with sight gauge	0 to 250 PSIG (0 to 17.2 bar)
Operating temperature:	0°F to 150°F (-18°C to 66°C)
Flow / SCFM (dm^3/s):	100 (47.19)

Lubricators

Port size	Flow SCFM (dm^3/s)	Part number metal bowl with sight gauge
1/2	100 (47.19)	**PL10-04WSS**

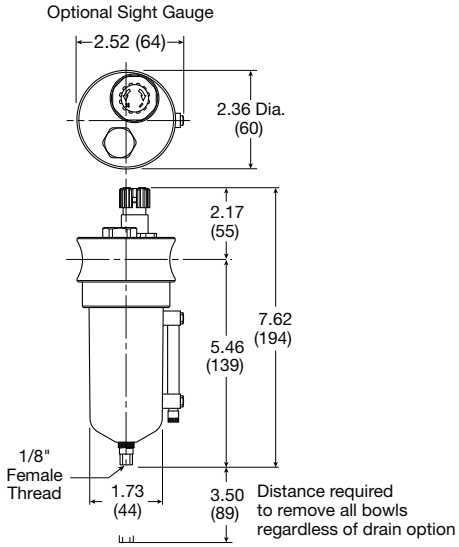

Service kits

Description	Part number
Drain kit - manual twist drain, small (old)	**SA600Y7-1SS**
large (new)	**SAP05481**
Pipe nipple, 316 Stainless Steel	**616A28-SS**
Sight dome kit - old	**RKL10SS**
new	**PS740N**

Specifications

Description	PL10
Bowl capacity	4.0 ounces
Port threads	1/2
Weight	1.9 lb. (0.85 kg)

Material specifications

Description	PL10
Body	316 stainless steel
Bowls	316 stainless steel
Dip tube / drain / fill plug	316 stainless steel
Seals	Fluorocarbon
Sight dome	Nylon
Sight gauge	Isoplast

Most popular.

Parker Hannifin Corporation
Pneumatic Division
Richland, Michigan
www.parker.com/pneumatics

Semi-Precision Dial Regulators

51R
- Pressure reference indicating dial face
- Non-rising, pressure-adjustment dial
- Self-relieving
- Full pressure adjustment in less than one full turn
- Recommended for pilot-air applications

52R, 53R, 54R
- Balanced poppet design
- Non-rising, pressure-adjusting dial
- High-relief flow (3/16" relief orifice)
- Two 1/4" gauge ports
- Piston operated

Operating information

Adjusting range pressure:	2 to 40 PSIG (0 to 2.8 bar) 5 to 160 PSIG (0 to 11.0 bar)
Max supply pressure:	300 PSIG (20.7 bar)
Max operating temperature:	150°F (65.5°C)

Dial Regulators, relieving

Port size	Flow capacity* SCFM (dm^3/s)	Part number Low pressure 2 to 40 PSIG (0.14 to 3 bar)	Part number Standard pressure 5 to 160 PSIG (0.34 to 11 bar)
1/4	0.7 (.3)	**51R125RA**	**51R126RA**
1/4	117 (55)	**52R125RA**	**52R126RA**
3/8	180 (85)	**52R225RA**	**52R226RA**
1/2	195 (92)	**52R325RA**	**52R326RA**
3/4	220 (104)	**52R425RA**	**52R426RA**
3/4	400 (189)	**53R425RA**	**53R426RA**
1	650 (307)	**53R525RA**	**53R526RA**
1-1/4	700 (330)	**53R625RA**	**53R626RA**
1-1/2	1,600 (755)	**54R725RA**	**54R726RA**
2	1,600 (755)	**54R825RA**	**54R826RA**

* SCFM = Standard cubic feet per minute at 100 PSIG (6.9 bar) inlet, 90 PSIG (6.2 bar) no-flow secondary setting and 25 PSIG pressure drop.

Service kits

Description	51R	52R	53R	54R
Adjustment dial knob	**RRP-16-024**	**RRP-16-024**	**RRP-16-024**	**RRP-16-024**
O-ring, repair kit	**GRP-95-260**	**GRP-95-260**	**GRP-95-261**	**GRP-95-262**
Piston and bonnet repair kit	**RRP-95-765**	**RRP-95-766**	**RRP-95-766**	**RRP-95-766**
Piston bottom and o-ring seal		**RRP-95-192**	**RRP-95-192**	**RRP-95-192**
Spring, regulation, belleville washer –				
2 to 40 PSIG (2.8 bar)	**RRP-95-906**	**RRP-95-906**	**RRP-95-906**	**RRP-95-906**
5 to 160 PSIG (11.0 bar)	**RRP-95-905**	**RRP-95-905**	**RRP-95-905**	**RRP-95-905**
Spring, main valve				**RRP-95-024**
Tamper resistant kit	**RRP-95-585**	**RRP-95-585**	**RRP-95-585**	**RRP-95-585**
Valve, main with u-cup seal & bottom plug		**RRP-95-914**		
Valve, main with u-cup seal		**RRP-95-151**		
Valve, main with o-ring seal			**RRP-95-152**	**RRP-95-153**
Valve, pilot with o-ring and valve spring	**RRP-96-934**	**RRP-96-934**	**RRP-96-935**	**RRP-96-935**

☐ Most popular.

Parker Hannifin Corporation
Pneumatic Division
Richland, Michigan
www.parker.com/pneumatics

51R

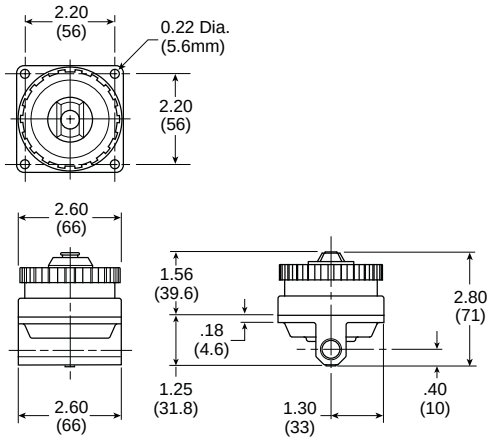

52R

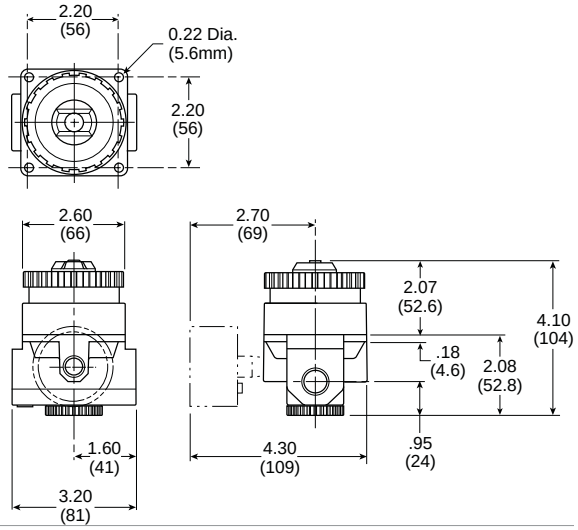

53R

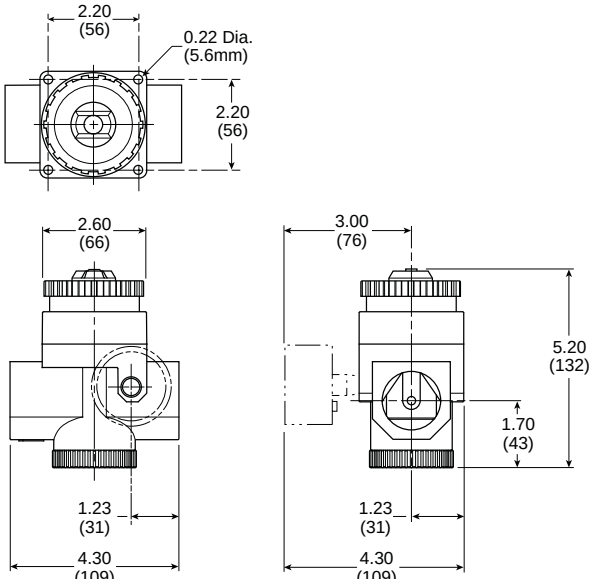

54R

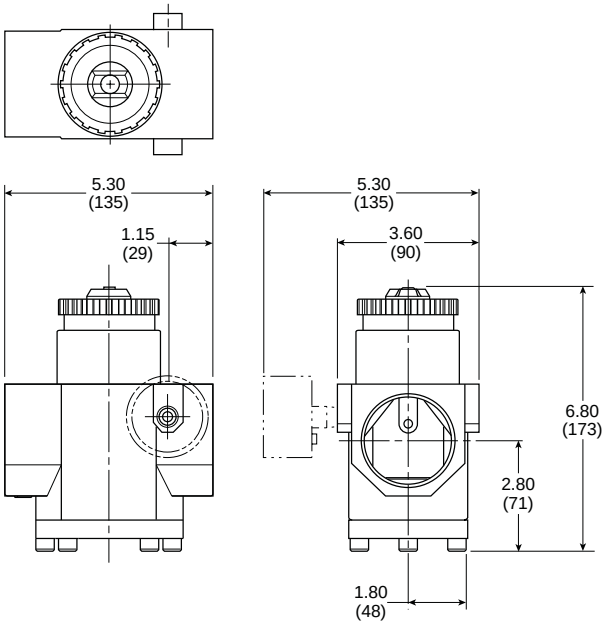

Specifications

Description	51R	52R	53R	54R
Bleed rate	0.05 SCFM	0.05 SCFM	0.05 SCFM	0.05 SCFM
Gauge port	—	Two ports 1/4	Two ports 1/4	Two ports 1/4
Port threads	1/4	1/4, 3/8, 1/2, 3/4	3/4, 1, 1-1/4	1-1/2, 2
Weight	1.3 lb. (0.5 kg)	2.3 lb. (1.04 kg)	4.0 lb. (1.8 kg)	9 lb. (4.1 kg)

Material specifications

Description	
Body	Zinc
Bonnet	Zinc / brass
Piston	Acetal
Seals	Nitrile
Springs	Steel
Valve assembly	Brass / nitrile / acetal

⚠ WARNING

Product rupture can cause serious injury.
Do not connect regulator to bottled gas.
Do not exceed maximum primary pressure rating.

CAUTION:
REGULATOR PRESSURE ADJUSTMENT –
The working range of knob adjustment is designed to permit outlet pressures within their full range. Pressure adjustment beyond this range is also possible because the knob is not a limiting device. This is a common characteristic of most industrial regulators, and limiting devices may be obtained only by special design. For best performance, regulated pressure should always be set by increasing the pressure up to the desired setting.

Parker Hannifin Corporation
Pneumatic Division
Richland, Michigan
www.parker.com/pneumatics

Precision Filter / Regulators

- The no-brass construction is well suited to harsh environments
- Internal and external epoxy finish for superior corrosion resistance
- Non-bleed design to reduce consumption
- Integral relief valve
- A gauge port provides convenient pressure gauge mounting
- The standard 5-micron filter minimizes internal contamination
- The filter dripwell contains a drain plug to easily drain trapped liquids
- Standard tapped exhaust
- Soft relief seat minimizes air loss

P3EA632 Series

Operating information

Supply pressure:	250 PSIG (17.2 bar), (1700 kPa) max
Temperature range:	-10°F to 160°F (-23°C to 71°C)
Sensitivity:	1.0" (.036 PSIG) (2.54 cm) water column
Flow capacity:	25 SCFM (42.5 m^3/HR) @ 100 PSIG, (7 bar), (700 kPa) supply and 20 PSIG, (1.5 bar), (150 kPa) setpoint
Exhaust capacity:	0.8 (1.36 m^3/HR) where downstream pressure is 5 PSIG, (.35 bar) (35 kPa) above 20 PSIG (1.5 bar), (150 kPa) setpoint (0.8 SCFM for 120 # unit)
Consumption:	Undetectable
Supply pressure effect:	Less than 1.25 PSIG, (.09 bar), (9 kPa) change for 100 PSIG, (7.0 bar), (700 kPa) change in supply pressure (1.90 PSIG for 120 # unit)

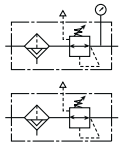

P3EA632
Precision Filter / Regulator

Port size	Spring	Part number
1/4"	1 to 60 PSIG	**P3EA63242NS**
1/4"	2 to 120 PSIG	**P3EA63252NS**

Note: Other spring ranges, port sizes, and options available. Please consult factory.

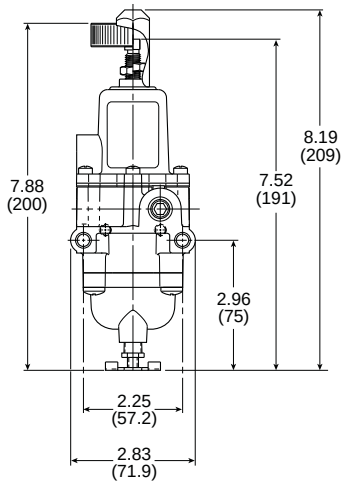

Service kits

Service kit	1 to 60, 2 to 120 PSIG	**PS19968-NR**
Tamper resistant kit		**PS12165**

Material specifications

Body and housing	Epoxy coated aluminum
Elastomers	Nitrile
Trim	Stainless steel, nickel plated steel

☐ Most popular.

⚠ WARNING
Product rupture can cause serious injury.
Do not connect regulator to bottled gas.
Do not exceed maximum primary pressure rating.

CAUTION:
REGULATOR PRESSURE ADJUSTMENT –
The working range of knob adjustment is designed to permit outlet pressures within their full range. Pressure adjustment beyond this range is also possible because the knob is not a limiting device. This is a common characteristic of most industrial regulators, and limiting devices may be obtained only by special design. For best performance, regulated pressure should always be set by increasing the pressure up to the desired setting.

Parker Hannifin Corporation
Pneumatic Division
Richland, Michigan
www.parker.com/pneumatics

Precision Pneumatic Input Signal Amplifier - 1/4"

- The P3BA208 uses a pneumatic input signal to accurately control output pressure based on a predetermined ratio
- A balanced supply valve minimizes the effects of supply pressure variation
- An aspirator tube compensates downstream pressure droop under flowing conditions
- A separate control chamber isolates the diaphragm from the main flow to eliminate hunting and buzzing
- Unit construction allows servicing without removal

P3BA208 Series
1/4" port size

Operating information

Signal : Output	1:1	1:2	1:3
Output pressure, maximum:	150 PSIG (10 bar)	150 PSIG (10 bar)	150 PSIG (10 bar)
Supply pressure, maximum:	250 PSIG (17 bar)	250 PSIG (17 bar)	250 PSIG (17 bar)
Flow capacity – 100 PSIG, (7 bar), supply 20 PSIG, (1.5 bar) output	45 SCFM (76.5 m³/HR)	45 SCFM (76.5 m³/HR)	45 SCFM (76.5 m³/HR)
Exhaust capacity – Downstream pressure 5 PSIG (.35 bar) above 20 PSIG (1.5 bar) setpoint	11 SCFM (18.7 m³/HR)	11 SCFM (18.7 m³/HR)	11 SCFM (18.7 m³/HR)
Sensitivity, water column:	.250" (.64 cm)	.500" (1.27 cm)	.750" (1.9 cm)
Ratio accuracy – % of 100 PSIG (7 bar) output span	1.0	1.0	1.0
% of output span with 100 PSIG (7 bar) input span	—	—	—
Supply pressure effect – for change of 100 PSIG (7 bar)	0.10 PSIG (.007 bar)	0.20 PSIG (.014 bar)	0.30 PSIG (.021 bar)
Ambient temperature:	-40°F to 200°F (-40°C to 93°C)	-40°F to 200°F (-40°C to 93°C)	-40°F to 200°F (-40°C to 93°C)

P3BA208
Precision Pneumatic Input Signal Amplifier

Port size	Pilot ratio	Part number
1/4"	1:1	**P3BA20812**
1/4"	1:2	**P3BA20822**
1/4"	1:3	**P3BA20823**

Note: Other spring ranges, port sizes, and options available. Please consult factory.

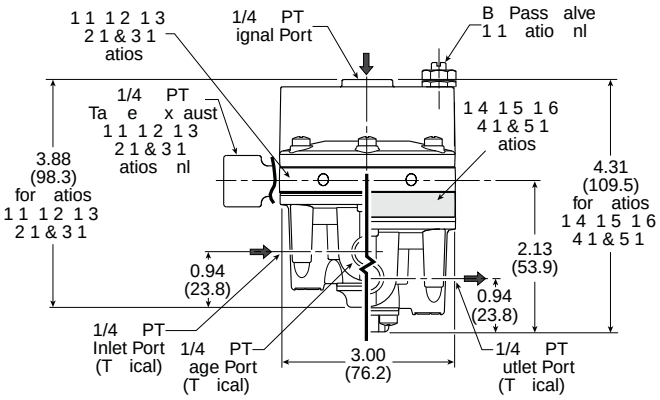

Service kits

1:1 ratio	**PS19513-11**
1:1 ratio w/ by-pass valve	**PS19513-11**
1:2 ratio	**PS19513-12**
1:3 ration	**PS19513-13**
Mounting bracket	**PS09921**

Mounting bracket

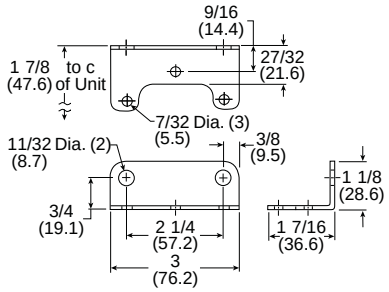

Material specifications

Body and housing	Aluminum
Elastomers	Nitrile on dacron fabric
Trim	Zinc plated steel, brass

☐ Most popular.

Parker Hannifin Corporation
Pneumatic Division
Richland, Michigan
www.parker.com/pneumatics

Precision Pneumatic Input Signal Amplifier - 1/2" & 3/4"

- Five signal to output ratios meet most control element requirements
- Control sensitivity of water column allows use in precision applications
- Large supply and exhaust Valves provide high forward and exhaust flows
- Soft supply and exhaust Valve seats minimize air consumption
- A balanced supply valve minimizes the effect of supply pressure variation
- An aspirator tube compensates downstream pressure droop under flow conditions
- A separate control chamber isolates the diaphragm from the main flow to eliminate hunting and buzzing
- Unit construction lets you service the P3BA45 without removing it from the line

P3BA45 Series
1/2" & 3/4" port size

Operating information

Signal : Output	1:1	1:2	1:3
Output pressure, maximum:	150 PSIG (10 bar)	150 PSIG (10 bar)	150 PSIG (10 bar)
Supply pressure, maximum:	250 PSIG (17 bar)	250 PSIG (17 bar)	250 PSIG (17 bar)
Flow capacity – 100 PSIG, (7 bar), supply 20 PSIG, (1.5 bar) output	150 SCFM (255 m^3/HR)	150 SCFM (255 m^3/HR)	150 SCFM (255 m^3/HR)
Exhaust capacity – Downstream pressure 5 PSIG (.35 bar) above 20 PSIG (1.5 bar) setpoint	40 SCFM (62.5 m^3/HR)	40 SCFM (62.5 m^3/HR)	40 SCFM (62.5 m^3/HR)
Sensitivity, water column:	1.0" (2.54 cm)	2.0" (5.08 cm)	3.0" (7.62 cm)
Ratio Accuracy – % of 100 PSIG (7 bar) output span	3.0	3.0	3.0
% of output span with 100 PSIG (7 bar) input span	—	—	—
Supply pressure effect – for change of 100 PSIG (7 bar)	0.10 PSIG (.007 bar)	0.20 PSIG (.014 bar)	0.30 PSIG (.021 bar)
Ambient temperature:	-40°F to 200°F (-40°C to 93°C)	-40°F to 200°F (-40°C to 93°C)	-40°F to 200°F (-40°C to 93°C)
Hazardous locations:	Acceptable for use in zones 1 and 2 for gas atmospheres; Groups IIA and IIB and zones 21 and 22 for dust atmospheres.		

P3BA45
Precision Pneumatic Input Signal Amplifier

Port size	Pilot ratio	Part number
1/2"	1:1	**P3BA4514A**
1/2"	1:2	**P3BA4524A**
1/2"	1:3	**P3BA4534A**
3/4"	1:1	**P3BA4516A**
3/4"	1:2	**P3BA4526A**
3/4"	1:3	**P3BA4536A**

Note: Other spring ranges, port sizes, and options available. Please consult factory.

Service kits

1:1 ratio	**PS19549-1**
1:1 ratio w/ tapped exhaust	**PS19549-1E**
1:2 ratio	**PS19549-2**
1:3 ratio	**PS19549-3**
1:1 w/ tapped exhaust, l option	**PS19549-20E**

Material specificationS

Body and housing	Aluminum
Diaphragm	Nitrile on dacron fabric
Trim	Zinc plated steel, brass

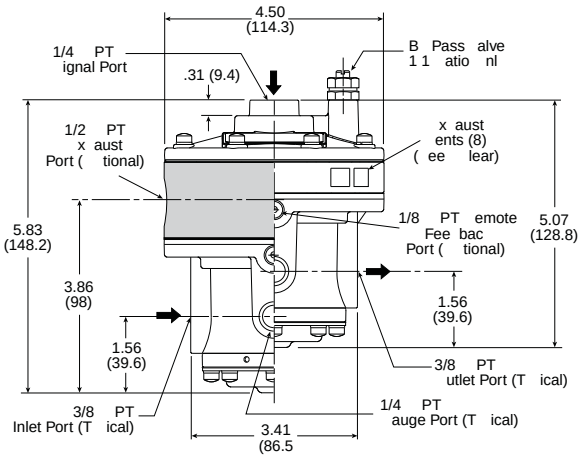

☐ Most popular.

Parker Hannifin Corporation
Pneumatic Division
Richland, Michigan
www.parker.com/pneumatics

High Precision Regulators

- Control sensitivity of .250" (.010 PSIG) (.64 cm) water column variation allows use in precision applications
- A compensating diaphragm lets the regulator remain unaffected by supply pressure changes
- Flow of up to 40 SCFM with 100 PSIG supply allows use in applications with high flow requirements
- An aspirator tube compensates downstream pressure droop under flow conditions
- A separate control chamber isolates the diaphragm from the main flow to eliminate hunting and buzzing
- Unit construction lets you service the regulator without removing it from the line

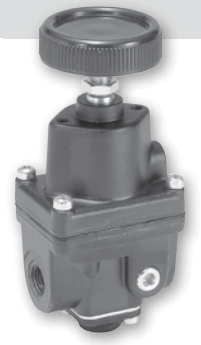

P3RA302 Series

Operating information

Supply pressure:	250 PSIG (17.2 bar), (1700 kPa) max
Ambient temperature:	-40°F to 200°F (-40°C to 93°C)
Sensitivity:	.250" (.010 PSIG) (.64 cm) water column
Flow capacity:	40 SCFM (68 m^3/HR) @ 100 PSIG, (7.0 bar), (700 kPa) supply and 20 PSIG, (1.5 bar), (150 kPa) setpoint
Exhaust capacity:	2.0 SCFM (3.4 m3/HR) where downstream pressure is 5 PSIG, (.35 bar), (35 kPa) above 20 PSIG, (1.5 bar), (150 kPa) setpoint
Supply pressure effect:	Less than 0.2 PSIG, (.014 bar), (.14 kPa) for 100 PSIG, (7.0 bar), (700 kPa) change in supply pressure
Hazardous locations:	Acceptable for use in zones 1 and 2 for gas atmosphere: Groups IIA and IIB and zones 21 and 22 for dust atmospheres

P3RA302
Compact High Precision Regulator

Port size	Spring	Part number
1/4"	0.5 to 30 PSIG	**P3RA30232**
1/4"	1 to 60 PSIG	**P3RA30242**
1/4"	2 to 100 PSIG	**P3RA30252**

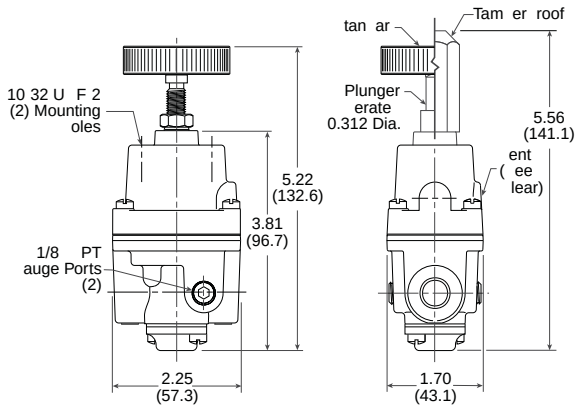

⚠ WARNING
Product rupture can cause serious injury.
Do not connect regulator to bottled gas.
Do not exceed maximum primary pressure rating.

☐ Most popular.

Service kits

Service kit	Nitrile, standard	**PS16116-13**
	Nitrile, non-relieving	**PS16116-14**
Tamper resistant kit		**PS12163**
Mounting bracket kit		**PS417BP**

Material specifications

Body and housing	Aluminum
Diaphragms	Nitrile on dacron
Trim	Brass

Mounting bracket

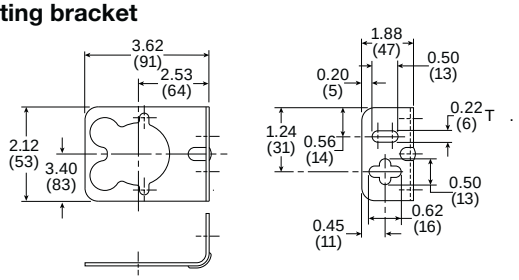

CAUTION:
REGULATOR PRESSURE ADJUSTMENT –
The working range of knob adjustment is designed to permit outlet pressures within their full range. Pressure adjustment beyond this range is also possible because the knob is not a limiting device. This is a common characteristic of most industrial regulators, and limiting devices may be obtained only by special design. For best performance, regulated pressure should always be set by increasing the pressure up to the desired setting.

Parker Hannifin Corporation
Pneumatic Division
Richland, Michigan
www.parker.com/pneumatics

High Precision Regulators

- Control sensitivity of .125" (.005 PSIG) (.32 cm) water column allows use in precision processes
- Pressure balanced supply valve prevents supply pressure changes from affecting the setpoint
- Optional check valve permits dumping of downstream pressure when supply is opened to atmosphere
- Separate control chamber isolates the diaphragm from the main flow to eliminate hunting and buzzing
- An aspirator tube compensates downstream pressure droop under flow conditions

P3RA102 Series

Operating information

Supply pressure:	500 PSIG (35 bar), (3500 kPa) max
Ambient temperature:	-40°F to 200°F (-40°C to 93°C)
Sensitivity:	.125" (.005 PSIG) (.32 cm) water column
Flow capacity:	40 SCFM (68 m^3/HR) @ 100 PSIG, (7.0 bar), (700 kPa) supply and 20 PSIG, (1.5 bar), (150 kPa) setpoint
Exhaust capacity:	5.5 SCFM (9.35 m3/HR) where downstream pressure is 5 PSIG, (.35 bar), (35 kPa) above 20 PSIG, (1.5 bar), (150 kPa) setpoint
Supply pressure effect:	Less than 0.1 PSIG, (.007 bar), (.7 kPa) for 100 PSIG, (7.0 bar), (700 kPa) change in supply pressure
Hazardous locations:	Acceptable for use in zones 1 and 2 for gas atmosphere: Groups IIA and IIB and zones 21 and 22 for dust atmospheres

P3RA102
Standard High Precision Regulator

Port size	Spring	Part number
1/4"	0.5 to 30 PSIG	**P3RA10232**
1/4"	1 to 60 PSIG	**P3RA10242**
1/4"	2 to 150 PSIG	**P3RA10262**

Service kits

Service kit	0 to 200 PSIG, relieving	**PS12125-1**
	0 to 200 PSIG, non-relieving	**PS12125-4**
Tamper resistant kit		**PS12165**
Mounting bracket kit, zinc plated steel		**PS09921**

Material specifications

Body and housing		Aluminum
Diaphragms	(standard unit only)	Buna N on dacron
Trim		Brass, zinc plated steel

⚠ WARNING
Product rupture can cause serious injury.
Do not connect regulator to bottled gas.
Do not exceed maximum primary pressure rating.

☐ Most popular.

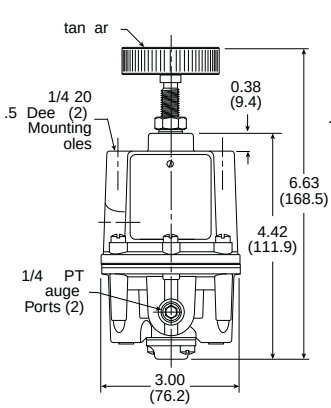

2 thru 200 PSIG Range

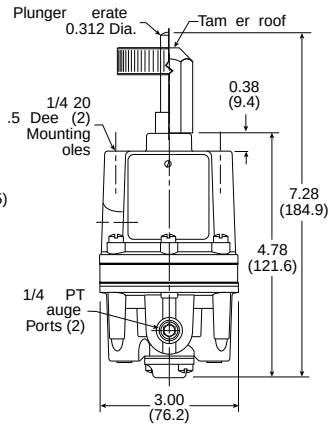

300 & 400 PSIG Range

Mounting bracket

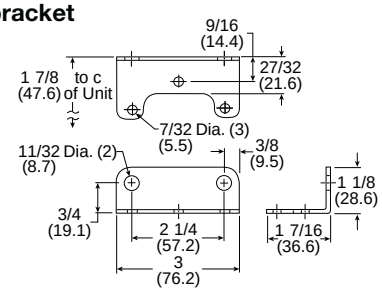

CAUTION:
REGULATOR PRESSURE ADJUSTMENT –
The working range of knob adjustment is designed to permit outlet pressures within their full range. Pressure adjustment beyond this range is also possible because the knob is not a limiting device. This is a common characteristic of most industrial regulators, and limiting devices may be obtained only by special design. For best performance, regulated pressure should always be set by increasing the pressure up to the desired setting.

Parker Hannifin Corporation
Pneumatic Division
Richland, Michigan
www.parker.com/pneumatics

High Precision Relief Valves

- Control sensitivity of .125" (.005 PSIG) (.32 cm) water column allows use in precision applications
- A separate control chamber and Aspirator Tube isolate the diaphragm from the main flow to eliminate hunting and buzzing
- Unit construction lets you service without removing it from the line
- Mounting bracket is available

P3RA102BP Series

Operating information

Setpoint range –	System pressure (maximum)
2 to 200 PSIG (0.15 to 14 bar) (15 to 1400 kPa)	300 PSIG (21 bar), (2100 kPa) max
300 to 400 PSIG (21 to 28 bar) (2100 to 2800 kPa)	500 PSIG (35 bar), (3500 kPa) max
Ambient temperature:	-40°F to 200°F (-40°C to 93°C)
Sensitivity:	.125" (.005 PSIG) (.32 cm) water column
Flow capacity:	40 SCFM (68 m3/HR) @ 100 PSIG, (7.0 bar), (700 kPa) system pressure

P3RA102BP
High Precision Relief Valve

Port size	Spring	Part number
1/4"	0.5 to 30 PSIG	**P3RA10232BP**
1/4"	1 to 60 PSIG	**P3RA10242BP**
1/4"	2 to 150 PSIG	**P3RA10262BP**

Service kits

Service kit	0 to 200 PSIG, standard	**PS12127-1**
Tamper resistant kit		**PS12165**
Mounting bracket kit, zinc plated steel		**PS09921**

Material specifications

Body and housing	Aluminum
Nozzle	Nitrile on dacron
Trim	Zinc plated steel, brass

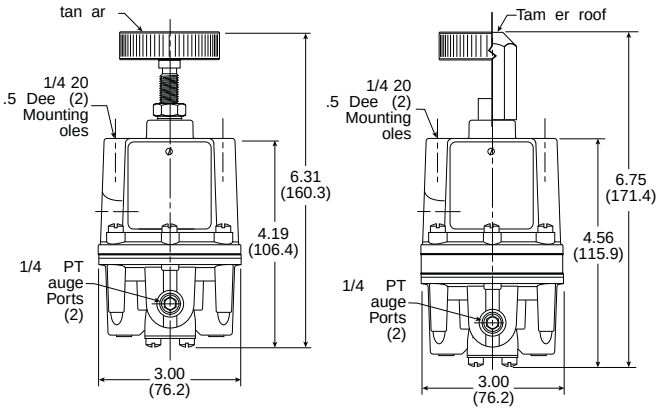

2 thru 200 PSIG Range **300 & 400 PSIG Range**

Mounting bracket

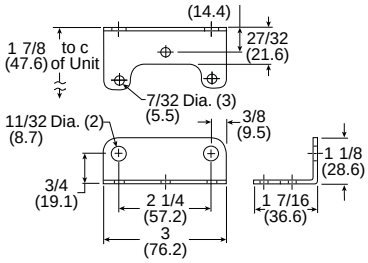

⚠ WARNING
Product rupture can cause serious injury.
Do not connect regulator to bottled gas.
Do not exceed maximum primary pressure rating.

CAUTION:
REGULATOR PRESSURE ADJUSTMENT –
The working range of knob adjustment is designed to permit outlet pressures within their full range. Pressure adjustment beyond this range is also possible because the knob is not a limiting device. This is a common characteristic of most industrial regulators, and limiting devices may be obtained only by special design. For best performance, regulated pressure should always be set by increasing the pressure up to the desired setting.

☐ Most popular.

Parker Hannifin Corporation
Pneumatic Division
Richland, Michigan
www.parker.com/pneumatics

High Precision Vacuum Regulator

- Control sensitivity of .125" (.005 PSIG) (.32 cm) water column allows use in precision applications
- Balanced supply valve minimizes effects of vacuum variation
- Aspirator tube compensates for downstream pressure droop under flow conditions
- Separate control chamber isolates the diaphragm from the main flow to eliminate hunting and buzzing
- Construction allows servicing without removing from the line

P3RA171 Series

Operating information

Vacuum supply:	29.92 Hg (760 torr) max
Ambient temperature:	-40°F to 200°F (-40°C to 93°C)
Sensitivity:	.125" (.005 PSIG) (.32 cm) water column
Flow capacity:	3 SCFM @ 650 torr supply, 250 torr setpoint
Vacuum supply effect:	Less than 1 torr for 100 torr (.04 Hg for 3.94 Hg) change in vacuum supply

P3RA171
High Precision Vacuum Regulator

Port size	Spring	Part number
1/4"	0 to 30 Hg	**P3RA17132NNKN**

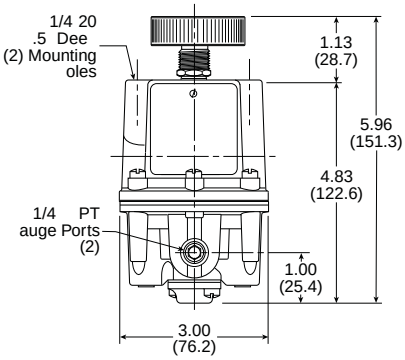

Service kits

Service kit	Includes diaphragm, valve, seat assemblies and gasket	**PS20966-9**
Tamper resistant kit		**PS20967-1**
Mounting bracket kit, zinc plated steel		**PS09921**
Vacuum gauge		**266298A**

Material specifications

Body and housing	Aluminum
Elastomers	Nitrile
Trim	Zinc plated steel, brass

Mounting bracket

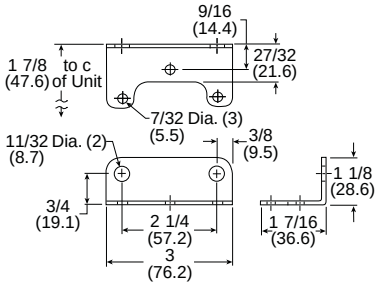

⚠ WARNING
Product rupture can cause serious injury.
Do not connect regulator to bottled gas.
Do not exceed maximum primary pressure rating.

CAUTION:
REGULATOR PRESSURE ADJUSTMENT –
The working range of knob adjustment is designed to permit outlet pressures within their full range. Pressure adjustment beyond this range is also possible because the knob is not a limiting device. This is a common characteristic of most industrial regulators, and limiting devices may be obtained only by special design. For best performance, regulated pressure should always be set by increasing the pressure up to the desired setting.

☐ Most popular.

Parker Hannifin Corporation
Pneumatic Division
Richland, Michigan
www.parker.com/pneumatics

Electronic Proportional Regulators

- Very fast response times
- Accurate output pressure
- Micro parameter settings
- Selectable I/O parameters
- Quick, full flow exhaust
- LED display indicates output pressure
- No air consumption in steady state
- Multiple mounting options
- Protection to IP65
- P31P flows to 19 dm3/s (40 SCFM)
- P32P flows to 57 dm3/s (120 SCFM)

P31P Series
Bottom exhaust

P32P Series
Bottom exhaust

Ordering information

P31PA 9 2 A Z 2 V D 1 ☐

Body size	
Global modular mini (1/4")	P31PA
Global modular compact (1/2")	P32PA

Thread type	
BSPP	1
BSPT	2
NPT	9

Port size	
Global modular mini (1/4")	2
Global modular compact (1/2")	4

Version	
Bottom ported exhaust (NC)	A
Bottom ported forced exhaust (NO)†	E

† When the supply voltage is lost the unit will automatically exhaust the regulated pressure to 0 bar (atmospheric pressure)

Pressure range	
Z	0 - 2 bar (0-29 PSIG)
D	0 - 10 bar (0-145 PSIG)

Power supply	
2	24 volts

Control signal	
V	0-10V‡

‡ Factory setting is 0-10 V control signal. 4-20 mA control signal available via parameter 4 on keypad.

Input Connector	
1	M12 (4-pin)

Output signal	
D	Digital, PNP
P	PNP or 0-10V
N	NPN or 0-10V
M	4-20mA fixed

D) Digital PNP output only, no analog output selectable
P) Digital PNP and analogue 0-10V outputs selectable, by means of parameter 6. (Factory default 0-10V)
N) Digital NPN and analog 0-10 V outputs selectable by means of parameter 6. Factory default 0-10V)
M) Analog 4-20mA output only.
Note: On all analog outputs the F.S. value can be adjusted by means of parameter 8.

Bold items are most common.

P31P mounting brackets

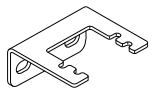

L-bracket

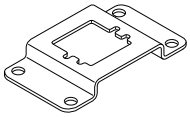

Foot bracket

Part number	Description
P3HKA00ML	L-bracket mounting kit
P3HKA00MC	Foot bracket mounting kit

P32P mounting brackets

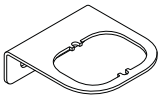

L-bracket

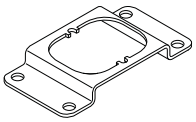

Foot bracket

Part number	Description
P3KKA00ML	L-bracket mounting kit
P3KKA00MC	Foot bracket mounting kit

Cables

Part number	Description
CB-M12-4P-2M	2 mtr. cable with moulded straight M12x1 connector

☐ Most popular.

Parker Hannifin Corporation
Pneumatic Division
Richland, Michigan
www.parker.com/pneumatics

Technical information

Working medium
Compressed air or inert gasses, filtered to 40µ.

Supply pressure
Max. operating pressure:
2 bar unit.....3 bar (43.5 PSIG)
10 bar unit.....10.5 bar (152 PSIG)

Min. Operating Pressure ..... P2 pressure + 0.5 bar (7.3 PSIG)

Pressure control range
Available in three pressure ranges, 0-2 bar (0-29 PSIG), 0-7 bar (0-101.5 PSIG) or 0-10 bar (0-145 PSIG). Pressure range can be changed through the software at all times. (parameter 19)

Temperature range
0°C up to +50°C (32°F up to 122°F)

Weights:
P31P = 0.291 kg (0.64 lbs)
P32P = 0.645 kg (1.42 lbs)

Air consumption
No consumption in stable regulated situation.

Display
The regulator is provided with a digital display, indicating the output pressure, either in bar or PSIG.
The factory setting is as indicated on the label, can be changed through to software at all times (parameter 14)

⚠ WARNING

Product rupture can cause serious injury.
Do not connect regulator to bottled gas.
Do not exceed maximum primary pressure rating.

Supply voltage
24 VDC +/- 10%

Power consumption
Max. 1.1W with unloaded signal outputs

Control signals
The electronic pressure regulator can be externally controlled through an analogue control signal of either 0-10V or 4-20mA. (parameter 4).

Output signals
As soon as the output pressure is within the signal band a signal is given of 24VDC, PNP Ri = 1 kOhm
Outside the signal band this connection is 0V.

Connections
(In case of output signal (Option D)
Central M12 connector 4-pole

The electrical connections are as follows:

Pin number		Function	Color
1	24 V	Supply	Brown
2	0 to 10 V	Control Signal Ri = 100k Ω	White
	4 to 20mA	Control Signal Ri = 500k Ω	
3	0 V (GND)	Supply	Blue
4	24 V	Alarm Output Signal	Black

P31P

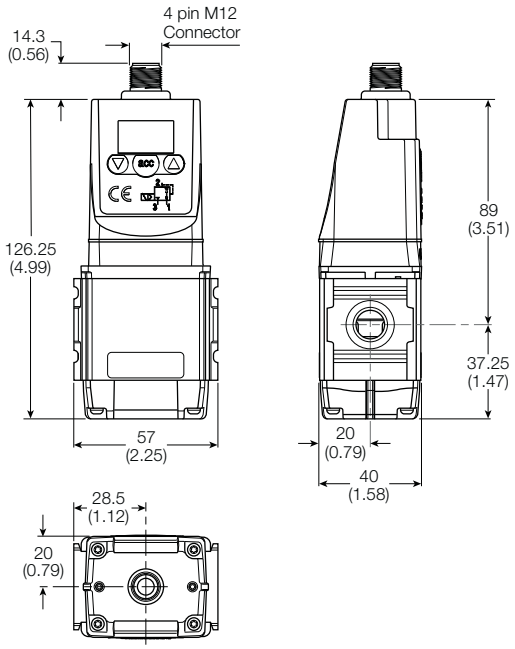

P32P

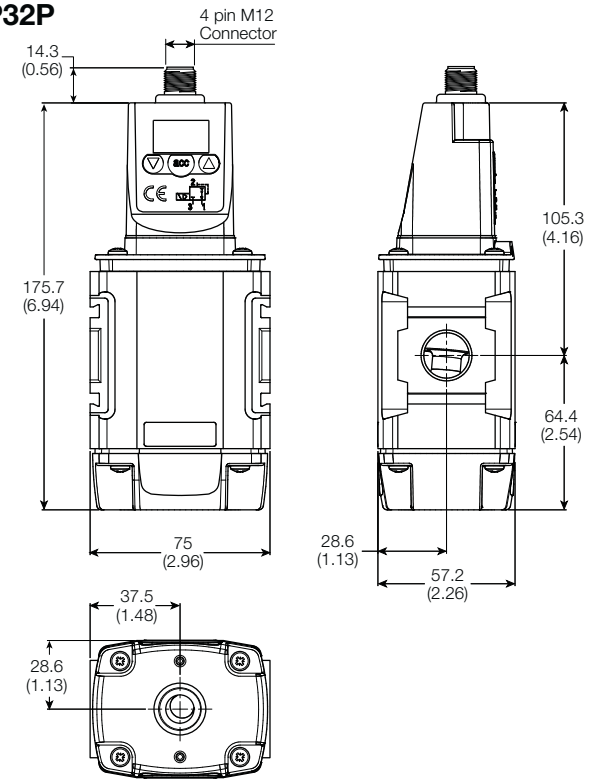

Parker Hannifin Corporation
Pneumatic Division
Richland, Michigan
www.parker.com/pneumatics

P3TF Bulk Liquid Separators

- Tested in accordance with ISO 8573.9
- High liquid removal efficiencies at all flow conditions
- Low pressure losses for low operational costs
- Multiple port sizes for a given flow rate provides increased flexibility during installation
- Suitable for variable flow compressors
- Works with all types of compressor and compressor condensate
- Low maintenance
- Lightweight cast aluminum housing with 1/4" to 3" ports
- External surface epoxy painted for maximum corrosion resistance

Applications

- Bulk liquid removal at any point in a compressed air system
- Protection of refrigeration and heatless regenerative desiccant dryers
- Liquid removal from compressor Inter-coolers / after-coolers
- Liquid separation within refrigeration dryers
- Pre-filtration

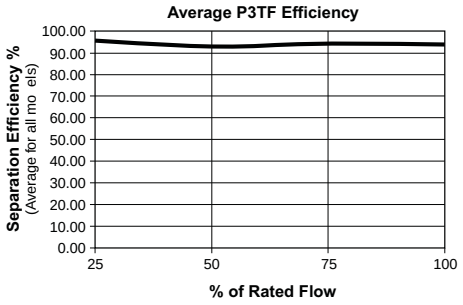

Operating information

	P3TF (Bulk Liquid Separator)
Operating pressure:	232 PSIG (16 bar) Max
Operating temperature:	35°F to 176°F (1.5°C to 80°C)

Material specifications

Description	P3TF (Bulk Liquid Separator)
Auto float drain	Plastic
Housing / bowl	Aluminum
Seals	Fluorocarbon

Service kits

Drain	**EF1**

P3TF Bulk Liquid Separator

	Pipe size	Flow SCFM (L/s)	Weight lb. (kg)	Part number (NPT)
P3TF	1/4"	21 (10)	0.9 (0.4)	**P3TFA92WAAN**
	3/8"	85 (40)	2.2 (1.0)	**P3TFA93WBAN**
	1/2"	85 (40)	2.2 (1.0)	**P3TFA94WCAN**
	3/4"	233 (110)	4.8 (2.2)	**P3TFA96WDAN**
	1"	233 (110)	2.6 (5.7)	**P3TFA98WEAN**
	1-1/2"	742 (350)	5.3 (11.6)	**P3TFA9BWGAN**
	2"	742 (350)	5.3 (11.6)	**P3TFA9CWHAN**
	3"	1695 (800)	12.0 (26.4)	**P3TFA9EWKAN**

Pressure differential at rated flow ... 1.0 PSID (0.07 bar)
Stated flows are for operation at 102 PSIG (7 bar) with reference to 20°C, 1 bar (a), 0% relative water vapor pressure.

Note: BSPT threads available upon request.

Most popular.

Parker Hannifin Corporation
Pneumatic Division
Richland, Michigan
www.parker.com/pneumatics

P3TF (Bulk Liquid Separator)

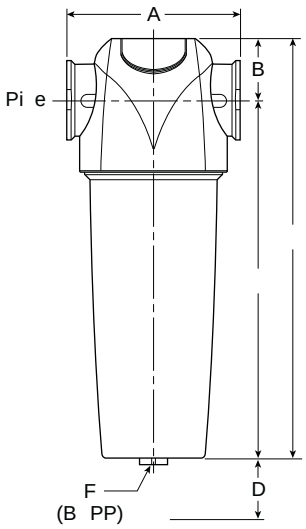

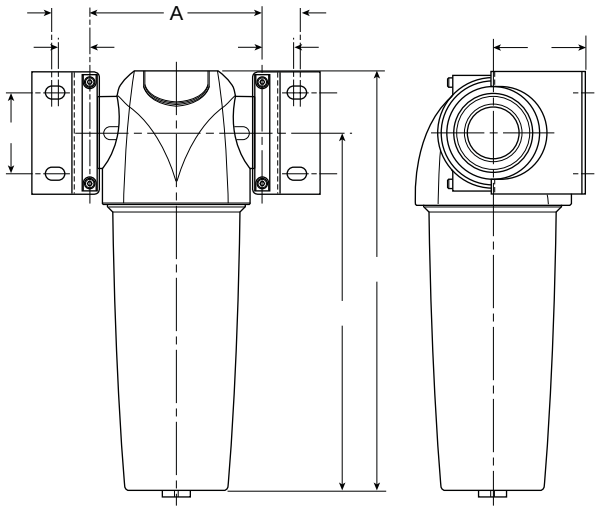

Dimensions

Part number	Pipe size	A	B	C	D	E	BSPP F	G	H	J	K	Wall mounting bracket kit
P3TFA92WAAN	1/4"	3.00 (76)	1.12 (28.5)	6.02 (153)	1.58 (40)	7.15 (181.5)	1/2	2.05 (50)	1.18 (30)	0.71 (18)	0.96 (24.5)	**P3TKA00MWA**
P3TFA93WBAN	3/8"	3.83 (97.5)	1.34 (34)	7.91 (201)	1.97 (50)	9.25 (235)	1/2	2.36 (60)	1.57 (40)	0.81 (20.5)	1.00 (25.5)	**P3TKA00MWB**
P3TFA94WCAN	1/2"	3.83 (97.5)	1.34 (34)	7.91 (201)	1.97 (50)	9.25 (235)	1/2	2.36 (60)	1.57 (40)	0.81 (20.5)	1.00 (25.5)	**P3TKA00MWB**
P3TFA96WDAN	3/4"	5.07 (129)	1.67 (42.5)	13.09 (232.5)	2.76 (70)	10.80 (275)	1/2	2.68 (68)	2.36 (60)	0.91 (23)	1.10 (28)	**P3TKA00MWD**
P3TFA98WEAN	1	5.07 (129)	1.67 (42.5)	12.68 (322)	2.76 (70)	14.35 (364.5)	1/2	2.68 (68)	2.36 (60)	0.91 (23)	1.10 (28)	**P3TKA00MWD**
P3TFA9BWGAN	1-1/2"	6.70 (170)	1.97 (50)	18.68 (474.5)	3.94 (100)	20.64 (524.5)	1/2	3.62 (92)	3.31 (84)	1.26 (32)	1.54 (39)	**P3TKA00MWF**
P3TFA9CWHAN	2"	6.70 (170)	1.97 (50)	18.68 (474.5)	3.94 (100)	20.64 (524.5)	1/2	3.62 (92)	3.31 (84)	1.26 (32)	1.54 (39)	**P3TKA00MWF**
P3TFA9EWKAN	3"	8.07 (205)	2.36 (60)	30.39 (772)	4.72 (120)	32.76 (832)	1/2	5.31 (135)	3.94 (100)	1.40 (35.5)	1.67 (42.5)	**P3TKA00MWJ**

Inches (mm)

Wall Mounting Bracket Kit
Mounting brackets provide additional support to filters installed in flexible piping systems or OEM equipment.

Parker Hannifin Corporation
Pneumatic Division
Richland, Michigan
www.parker.com/pneumatics

P3TF Series Bulk Liquid Separators

- Designed in accordance with ASME and CRN
- Connection sizes: 4 inch & 6 inch
- High liquid removal efficiencies at all flow conditions
- Suitable for variable flow compressors
- Works with all types of compressor and compressor condensate
- External surface epoxy painted for maximum corrosion resistance

P3TF Series

Material specifications

Baffle	Plated steel
Body	Steel
Deflector	Plated steel
Seals	Fluorocarbon
Stud	Plated steel

Operating information

	P3TF Series
Operating Pressure:	232 PSIG (16 bar)
Operating Temperature:	35°F to 150°F (1.5°C to 66°C)

Inlet air pressure correction

For pressures above 232 PSIG (16 bar), use manual drain.

PSI	15	29	44	58	73	87	100	116	131	145	160	174	189	203	218	232	247	261	275	290
bar	1	2	3	4	5	6	7	8	9	10	11	12	13	14	15	16	17	18	19	20
Factor	2.65	1.87	1.53	1.32	1.18	1.08	1.00	0.94	0.88	0.84	0.80	0.76	0.73	0.71	0.68	0.66	0.64	0.62	0.61	0.59

Bulk Liquid Separators

		Port size	Flow SCFM	Part number
P3TF		4" Flange	2119	**P3TFAFFW2AN**
		6" Flange	3814	**P3TFAFGW3AN**

P3TF (Bulk Liquid Separator)

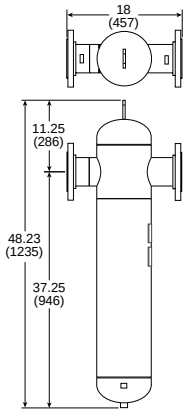

P3TFAFFW2AN

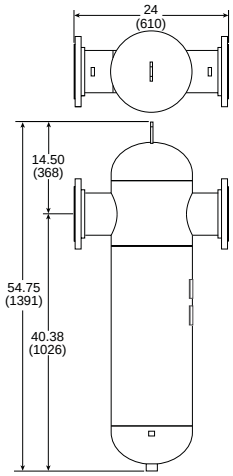

P3TFAFGW3AN

Service kits

Description	P3TF Series
DP gauge replacement kit	**DPG-Kit**
Drain kit - 1/2" NPT	**HDF-120-NPT-A**

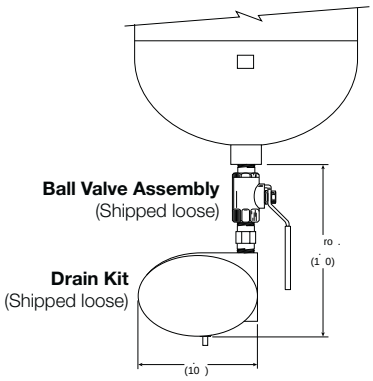

Most popular.

Parker Hannifin Corporation
Pneumatic Division
Richland, Michigan
www.parker.com/pneumatics